INDUSTRIAL AND
ENGINEERING TECHNOLOGY
Co., Limited
HONG KONG

DRILLING TOOLS
PRODUCT CATALOG

Reliable Tools. Superior Performance.
Built for Demanding Conditions.

8 Floor, China Hong Kong Tower,
8-12 Hennessy Road,
Wan Chai, Hong Kong

+852 5473 6914

business@iet-hongkong.com

www.iet-hongkong.com

INDUSTRIAL AND
ENGINEERING TECHNOLOGY
Co., Limited
HONG KONG

CATALOG CONTENTS

Find the right tools.
Built for performance.

01-06	COMPANY OVERVIEW
07-68	DOWN THE HOLE HAMMERS
69-86	DRILL BITS
95-102	DRILL RODS
103-110	COUPLINGS AND ADAPTERS
117-124	DRILLING RIGS AND SYSTEMS
125-130	AUXILIARY TOOLS
131-132	PACKAGING AND TRANSPORTATION

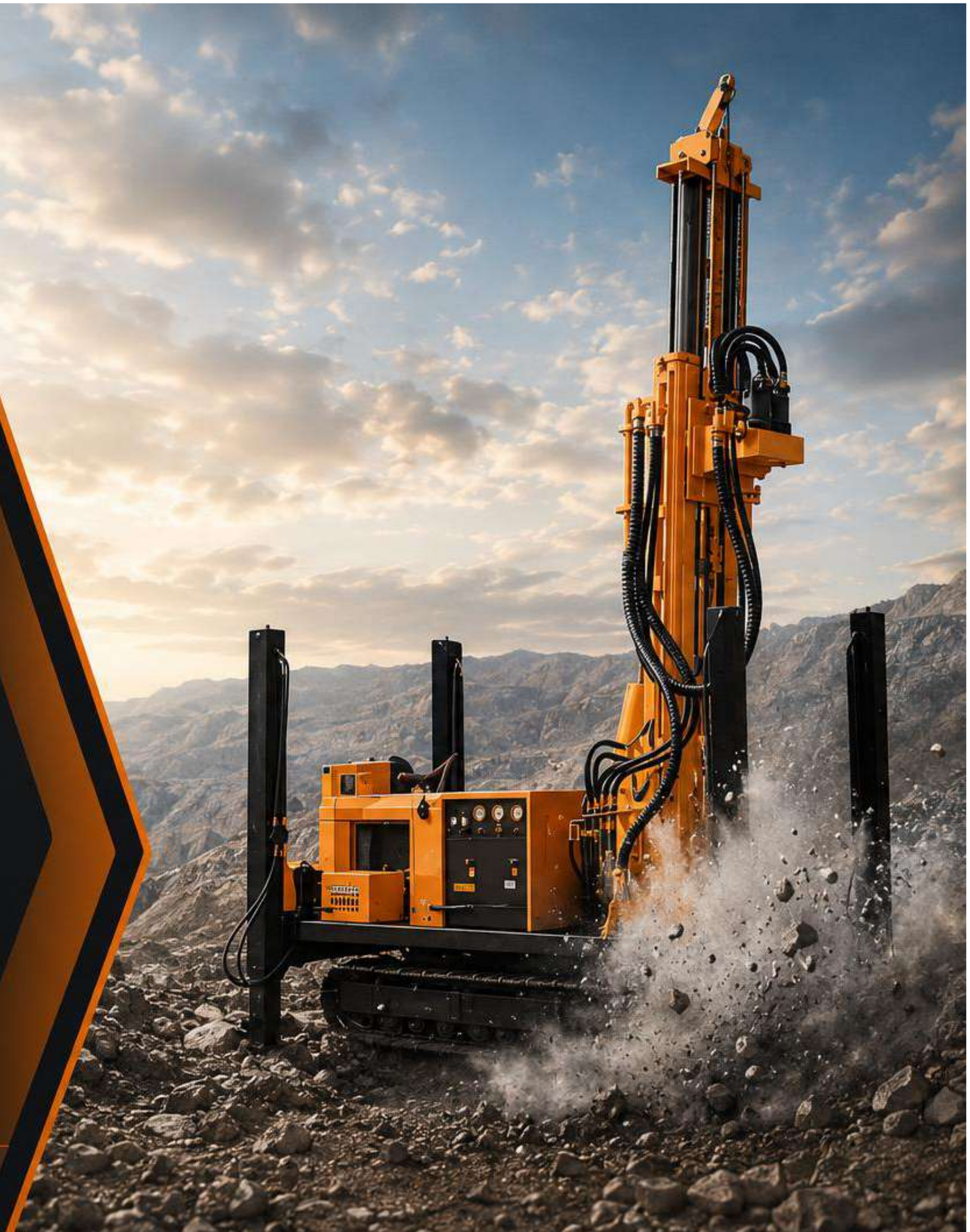

About Us

Contact Information

Floor, China Hong Kong Tower,
8-12 Hennessy Road,
Wan Chai, Hong Kong

WhatsApp / WeChat:
+852 5723 6914

E-mail: business@iet-hongkong.com

www.iet-hongkong.com

About Us

Industrial and Engineering Technology Co., Limited is a Hong Kong-based company specializing in drilling tools, mining equipment, casing systems, and industrial products for mining, construction, and infrastructure industries.
We cooperate with manufacturing partners in China to provide reliable industrial products, OEM services, and stable quality control for customers worldwide.

- Drilling Tools & DTH Systems
- Casing Systems & Industrial Components
- OEM Manufacturing Services
- Export & International Supply
- Quality Control & Inspection Support

Industrial and Engineering Technology Co., Limited is focused on reliable products, professional service, and long-term cooperation with global customers.

PRODUCT APPLICATION

Our products are widely used in various drilling and excavation applications across multiple industries.

01

WATER WELL DRILLING

Efficient drilling solutions for water well exploration and development.

02

OPEN-PIT MINING

High-performance drilling tools for blast hole drilling in open-pit mines.

03

UNDERGROUND MINING

Durable tools for underground drilling, production and development.

04

CONSTRUCTION ENGINEERING

Advanced equipment for foundation, piling and infrastructure projects.

05

TUNNEL EXCAVATION

Reliable drilling tools for tunnel boring, rock support and excavation works.

06

EARTHWORK PROJECTS

Effective drilling solutions for anchoring, rock breaking and earthwork applications.

COMPETITIVE ADVANTAGES

We are committed to delivering high-quality drilling tools and reliable solutions that help our customers improve efficiency, reduce costs, and achieve long-term success in demanding mining and construction environments.

STRONG SUPPLY CHAIN

With manufacturing partners and OEM production support in China, we provide stable quality, competitive pricing, and reliable supply for customers worldwide.

CUSTOMIZATION SERVICES

Based on customer requirements and project needs, we provide customized industrial products and OEM solutions.

PRODUCT IMPROVEMENT SOLUTIONS

Our technical team continuously improves product performance according to market demand and customer feedback.

COMPETITIVE PRICING

Direct cooperation with manufacturing partners allows us to provide competitive prices and flexible supply conditions.

TECHNICAL SUPPORT

Professional technical support and quality inspection help ensure reliable product performance.

GLOBAL EXPORT SUPPLY

Supply experience for customers in Germany, Italy, Bulgaria, Canada, USA, and Eastern Europe.

RELIABLE TOOLS FOR HARD ROCK CONDITIONS

Our DTH hammers are engineered for stable performance, high wear resistance, and long service life in the most demanding drilling environments.

STABLE PERFORMANCE

Engineered for consistent and reliable operation.

HIGH WEAR RESISTANCE

Premium materials and heat treatment for extended life.

LONG SERVICE LIFE

Designed for durability and maximum productivity.

SUITABLE FOR MULTIPLE APPLICATIONS

Ideal for mining, quarrying and construction projects.

01 DTH Hammer

DTH hammers are designed for reliable drilling in hard rock conditions.

- » Stable performance
- » High wear resistance
- » Long service life
- » Suitable for mining and construction projects

Quick Performance

Our high-pressure DTH hammer without foot valve is designed for stable performance and efficient drilling in hard rock conditions.

Advantages:
- Lower air consumption
- Higher drilling efficiency
- Simple structure and easy maintenance
- Long service life
- Stable performance in hard rock drilling

Widely used in mining, quarry, water well, foundation, and construction drilling projects.

QP480

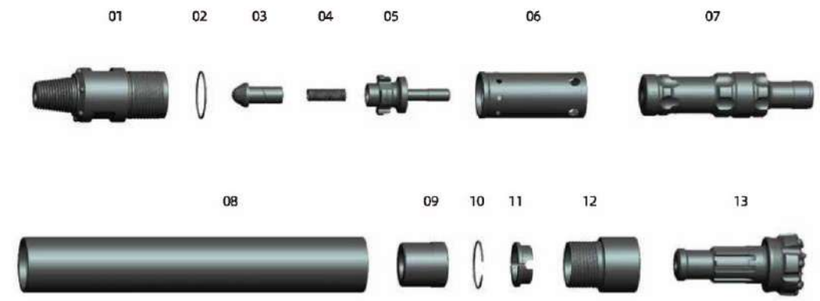

01-SP480-01

Ref.	部件 Parts	单重 Weight	件号 Part No	Ref.	部件 Parts	单重 Weight	件号 Part No
01	接头 Top Sub	7.4 Kg	01-QP480-01	09	衬套 Guided Sleeve	1.5 Kg	01-QP480-09
02	O形圈 "O"Ring	0.01 Kg	01-QP480-02	10	挡圈 Check Ring	0.02 Kg	01-QP480-10
03	逆止阀 Check Valve	0.3 Kg	01-QP480-03	11	卡环 Retainer Ring	0.34 Kg	01-QP480-11
04	弹簧 Spring	0.04 Kg	01-QP480-04	12	卡钎套 Drive Chuck	3.1 Kg	01-QP480-12
05	配气座 Valve Seat	1 Kg	01-QP480-05	13	钻头 Drill Bit		01-QP480-13
06	内缸 Inner Cylinder	1.5 Kg	01-QP480-06				
07	活塞 Piston	8 Kg	01-QP480-07				
08	外缸 Piston Case	11.6 Kg	01-QP480-08				

技术参数 / Technical Parameters

总长（不含钻头） Length(Less bit)	总重 Weight	冲击器外径 Outer Diameter	接头螺纹 Connection Thread	钻头钎柄 Bit Shank	钻孔范围 Hole Range
863mm	35Kg	¢100mm	API2 3/8"REG	SP480	¢108-¢135mm

工作风压 Working Pressure	推荐转速 Recommended Rotation Speed	耗风量/Air Consumption 1.0Mpa	耗风量/Air Consumption 1.8Mpa
1.0-1.9 Mpa	30-60 r/min	5.5m³/min	9m³/min

QP580

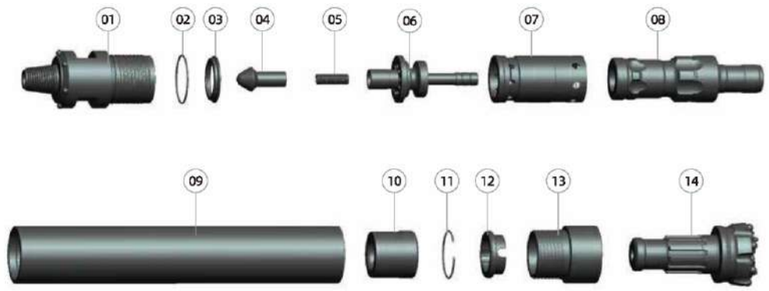

Ref.	部件 Parts	单重 Weight	件号 Part No	Ref.	部件 Parts	单重 Weight	件号 Part No
01	接头 Top Sub	14.2 Kg	01-QP580-01	09	外缸 Piston Case	22.7 Kg	01-QP580-09
02	O形圈 "O"Ring	0.01 Kg	01-QP580-02	10	衬套 Guided Sleeve	3.1 Kg	01-QP580-10
03	碟簧 Disc Spring	0.2 Kg	01-QP580-03	11	挡圈 Check Rin	0.02 Kg	01-QP580-11
04	逆止阀 Check Valve	0.4 Kg	01-QP580-04	12	卡环 Retainer Ring	0.7 Kg	01-QP580-12
05	弹簧 Spring	0.02 Kg	01-QP580-05	13	卡钎套 Drive Chuck	5.7 Kg	01-QP580-13
06	配气座 Valve Seat	2.5 Kg	01-QP580-06	14	钻头 Drill Bit		01-QP580-14
07	内缸 Inner Cylinder	2.3 Kg	01-QP580-07				
08	活塞 Piston	12 Kg	01-QP580-08				

技术参数 / Technical Parameters

总长（不含钻头） Length(Less bit)	总重 Weight	冲击器外径 Outer Diameter	接头螺纹 Connection Thread	钻头钎柄 Bit Shank	钻孔范围 Hole Range
970mm	64Kg	¢126mm	API2 3/8"REG	SP580	¢136-¢155mm

适用气压 Work Pressure	推荐转速 Recommended Rotation Speed	耗风量/Air Consumption	
		1.0Mpa	1.8Mpa
1.2-2.2 Mpa	30-60 r/min	7.5m³/min	12m³/min

QP680

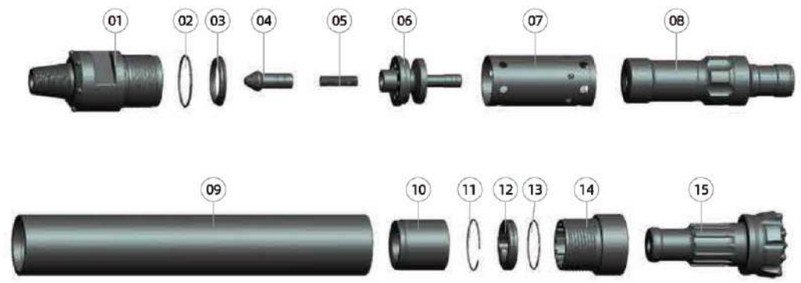

Ref.	部件 Parts	单重 Weight	件号 Part No	Ref.	部件 Parts	单重 Weight	件号 Part No
01	接头 Top Sub	21.5 Kg	01-QP680-01	09	外缸 Piston Case	33 Kg	01-QP680-09
02	O形圈 "O"Ring	0.01 Kg	01-QP680-02	10	衬套 Guided Sleeve	5.5 Kg	01-QP680-10
03	碟簧 Disc Spring	0.34 Kg	01-QP680-03	11	挡圈 Check Ring	0.02 Kg	01-QP680-11
04	逆止阀 Check Valve	0.56 Kg	01-QP680-04	12	卡环 Retainer Ring	1 Kg	01-QP680-12
05	弹簧 Spring	0.05 Kg	01-QP680-05	13	O形圈 "O"Ring	0.01 Kg	01-QP680-13
06	配气座 Valve Seat	4.3 Kg	01-QP680-06	14	卡钎套 Drive Chuck	7 Kg	01-QP680-14
07	内缸 Inner Cylinder	4.2 Kg	01-QP680-07	15	钻头 Drill Bit		01-QP680-15
08	活塞 Piston	23 Kg	01-QP680-08				

技术参数 / Technical Parameters

总长（不含钻头） Length(Less bit)	总重 Weight	冲击器外径 Outer Diameter	接头螺纹 Connection Thread	钻头钎柄 Bit Shank	钻孔范围 Hole Range
1131mm	100.5Kg	¢148mm	API3 1/2"REG	SP680	¢158-¢203mm

适用气压 Work Pressure	推荐转速 Recommended Rotation Speed	耗风量/Air Consumption	
		1.8Mpa	2.4Mpa
1.2-2.7 Mpa	30-60 r/min	16m³/min	23m³/min

QP780

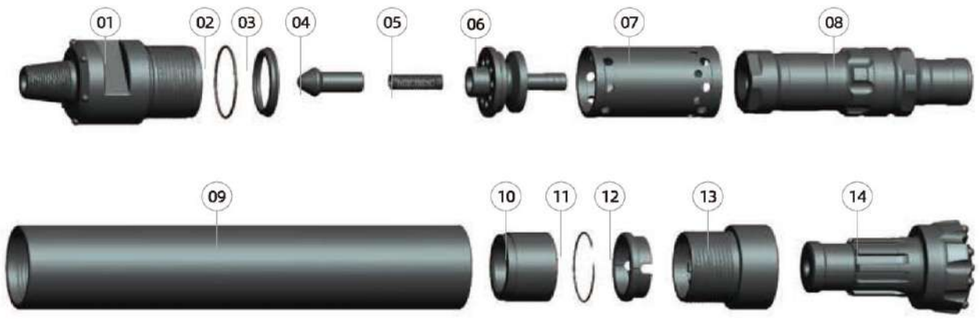

Ref.	部件 Parts	单重 Weight	件号 Part No	Ref.	部件 Parts	单重 Weight	件号 Part No
01	接头 Top Sub	38.5 Kg	01-QP780-01	09	衬套 Guided Sleeve	6.8 Kg	01-QP780-09
02	O形圈 "O"Ring	0.02 Kg	01-QP780-02	10	卡环 Retainer Ring	1.3 Kg	01-QP780-10
03	逆止阀 Check Valve	0.65 Kg	01-QP780-03	11	O形圈 "O"Ring	0.01 Kg	01-QP780-11
04	弹簧 Spring	0.1 Kg	01-QP780-04	12	卡钎套 Drive Chuck	12.6 Kg	01-QP780-12
05	配气座 Valve Seat	6.2 Kg	01-QP780-05	13	钻头 Drill Bit		01-QP780-13
06	内缸 Inner Cylinder	7.4 Kg	01-QP780-06				
07	活塞 Piston	44.5 Kg	01-QP780-07				
08	外缸 Piston Case	63 Kg	01-QP780-08				

技术参数 / Technical Parameters

总长（不含钻头） Length(Less bit)	总重 Weight	冲击器外径 Outer Diameter			
1264mm	181Kg	¢185mm	API4 1/2"REG	SP882	¢198- ¢254mm
适用气压 Work Pressure		Recommended Rotation Speed			
1.5-3.3 Mpa		30-60 r/min		25m³/min	34m³/min

QP882

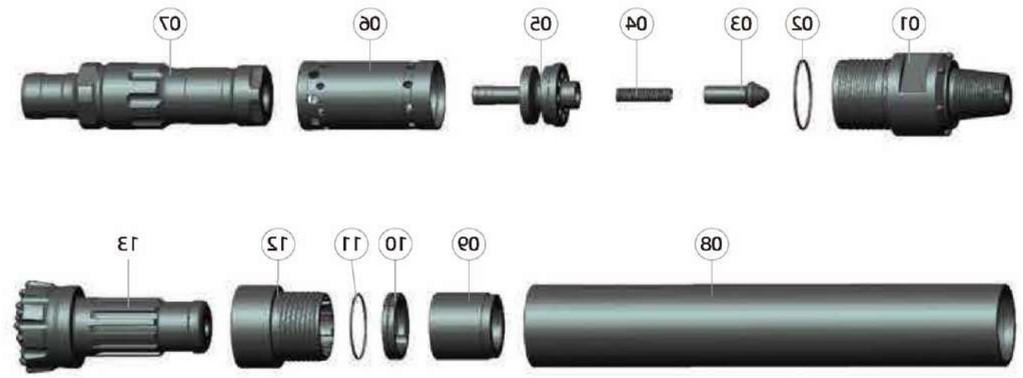

Ref.	部件 Parts	单重 Weight	件号 Part No	Ref.	部件 Parts	单重 Weight	件号 Part No
01	接头 Top Sub	31.2 Kg	01-QP882-01	09	外缸 Piston Case	44.5 Kg	01-QP882-09
02	O形圈 "O"Ring	0.01 Kg	01-QP882-02	10	衬套 Guided Sleeve	5 Kg	01-QP882-10
03	碟簧 Disc Spring	0.5 Kg	01-QP882-03	11	挡圈 Check Rin	0.03 Kg	01-QP882-11
04	逆止阀 Check Valve	0.65 Kg	01-QP882-04	12	卡环 Retainer Ring	1.5 Kg	01-QP882-12
05	弹簧 Spring	0.09 Kg	01-QP882-05	13	卡钎套 Drive Chuck	10.5 Kg	01-QP882-13
06	配气座 Valve Seat	5.5 Kg	01-QP882-06	14	钻头 Drill Bit		01-QP882-14
07	内缸 Inner Cylinder	5.5 Kg	01-QP882-07				
08	活塞 Piston	34.5 Kg	01-QP882-08				

技术参数 / Technical Parameters

总长（不含钻头） Length(Less bit)	总重 Weight	冲击器外径 Outer Diameter	接头螺纹 Connection Thread	钻头钎柄 Bit Shank	钻孔范围 Hole Range
1195mm	140Kg	¢165mm	API3 1/2"REG	SP780	¢178- ¢216mm
适用气压 Work Pressure		推荐转速 Recommended Rotation Speed		耗风量/Air Consumption	
				1.8Mpa	2.4Mpa
1.5-2.8 Mpa		30-60 r/min		21m³/min	28m³/min

QP1080

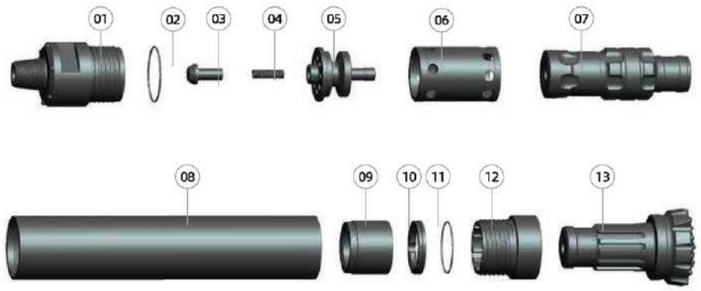

Ref.	部件 Parts	单重 Weight	件号 Part No	Ref.	部件 Parts	单重 Weight	件号 Part No
01	接头 Top Sub	62 Kg	01-QP1080-01	09	衬套 Guided Sleeve	12.5 Kg	01-QP1080-11
02	O形圈 "O"Ring	0.02 Kg	01-QP1080-02	10	卡环 Retainer Ring	2 Kg	01-QP1080-12
03	逆止阀 Check Valve	1.5 Kg	01-QP1080-03	11	O形圈 "O"Ring	0.02 Kg	01-QP1080-13
04	弹簧 Spring	0.25 Kg	01-QP1080-04	12	卡钎套 Drive Chuck	19.8 Kg	01-QP1080-14
05	配气座 Valve Seat	13.5 Kg	01-QP1080-05	13	钻头 Drill Bit		01-QP1080-15
06	内缸 Inner Cylinder	13 Kg	01-QP1080-06				
07	活塞 Piston	71.5 Kg	01-QP1080-07				
08	外缸 Piston Case	92 Kg	01-QP1080-08				

技术参数 / Technical Parameters

总长（不含钻头）Length(Less bit)	总重 Weight	冲击器外径 Outer Diameter	接头螺纹 Connection Thread	钻头钎柄 Bit Shank	钻孔范围 Hole Range
1410mm	289Kg	¢225mm	API5 1/2"REG	SP1080	¢254-¢311mm

适用气压 Work Pressure	推荐转速 Recommended Rotation Speed	耗风量/Air Consumption	
		1.8Mpa	2.4Mpa
1.5-3.3 Mpa	25～50 r/min	36m³/min	58m³/min

QP1280

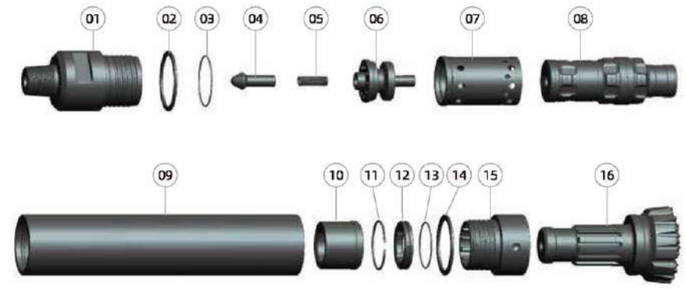

Ref.	部件 Parts	单重 Weight	件号 Part No	Ref.	部件 Parts	单重 Weight	件号 Part No
01	接头 Top Sub	126 Kg	01-QP1280-01	09	外缸 Piston Case	185.4 Kg	01-QP1280-09
02	垫片 Adjuster Shim	1.2 Kg	01-QP1280-02	10	衬套 Guided Sleeve	19 Kg	01-QP1280-10
03	O形圈 "O"Ring	0.03 Kg	01-QP1280-03	11	挡圈 Check Ring	0.25 Kg	01-QP1280-11
04	逆止阀 Check Valve	1.5 Kg	01-QP1280-04	12	卡环 Retainer Ring	4.5 Kg	01-QP1280-12
05	弹簧 Spring	0.2 Kg	01-QP1280-05	13	O形圈 "O"Ring	0.03 Kg	01-QP1280-13
06	配气座 Valve Seat	18.5 Kg	01-QP480-06	14	垫片 Adjuster Shim	1.2 Kg	01-QP1280-14
07	内缸 Inner Cylinder	22 Kg	01-QP480-07	15	卡钎套 Drive Chuck	42.5 Kg	01-QP1280-15
08	活塞 Piston	107 Kg	01-QP480-08	16	钻头 Drill Bit		01-QP1280-16

技术参数 / Technical Parameters

总长（不含钻头）Length(Less bit)	总重 Weight	冲击器外径 Outer Diameter	接头螺纹 Connection Thread	钻头钎柄 Bit Shank	钻孔范围 Hole Range
1630mm	530Kg	¢275mm	API6 5/8"REG	SP1280	¢295-¢400mm

适用气压 Work Pressure	推荐转速 Recommended Rotation Speed	耗风量/Air Consumption	
		1.8Mpa	2.4Mpa
1.5-3.3 Mpa	30～55 r/min	45m³/min	68m³/min

QP1480

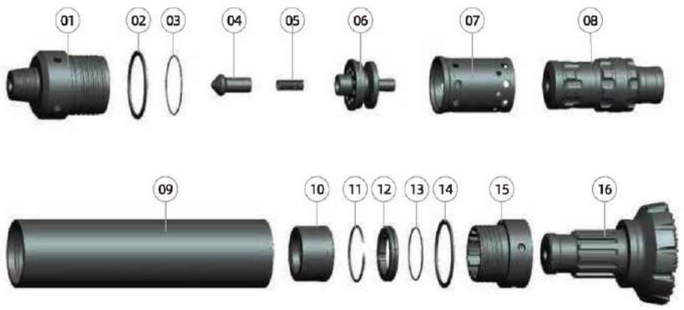

Ref.	部件 Parts	单重 Weight	件号 Part No	Ref.	部件 Parts	单重 Weight	件号 Part No
01	接头 Top Sub	160 Kg	01-QP1480-01	09	外缸 Piston Case	292 Kg	01-QP1480-09
02	垫片 Adjuster Shim	1.5 Kg	01-QP1480-02	10	衬套 Guided Sleeve	31.5 Kg	01-QP1480-10
03	O形圈 "O"Ring	0.05 Kg	01-QP1480-03	11	挡圈 Check Ring	0.5 Kg	01-QP1480-11
04	逆止阀 Check Valve	3.4 Kg	01-QP1480-04	12	卡环 Retainer Ring	7.6 Kg	01-QP1480-12
05	弹簧 Spring	0.4 Kg	01-QP1480-05	13	O形圈 "O"Ring	0.03 Kg	01-QP1480-13
06	配气座 Valve Seat	31.5 Kg	01-QP1480-06	14	垫片 Adjuster Shim	1.5 Kg	01-QP1480-14
07	内缸 Inner Cylinder	28.7 Kg	01-QP1480-07	15	卡钎套 Drive Chuck	64 Kg	01-QP1480-15
08	活塞 Piston	173 Kg	01-QP1480-08	16	钻头 Drill Bit		01-QP1480-16

技术参数 / Technical Parameters

总长（不含钻头） Length(Less bit)	总重 Weight	冲击器外径 Outer Diameter	接头螺纹 Connection Thread	钻头钎柄 Bit Shank	钻孔范围 Hole Range
1744mm	796Kg	¢332mm	API7 5/8"REG	SP1480	¢350-¢550mm

适用气压 Work Pressure	推荐转速 Recommended Rotation Speed	耗风量/Air Consumption	
		1.8Mpa	2.4Mpa
1.5-3.3 Mpa	30~55 r/min	53m³/min	76m³/min

QP1880

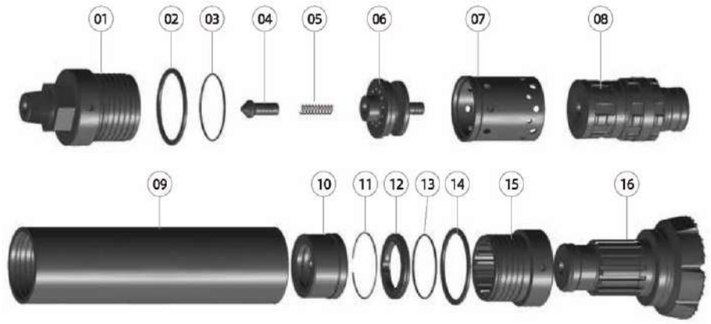

Ref.	部件 Parts	单重 Weight	件号 Part No	Ref.	部件 Parts	单重 Weight	件号 Part No
01	接头 Top Sub	361.5Kg	01-QP1880-01	09	外缸 Piston Case	493 Kg	01-QP1880-09
02	垫片 Adjuster Shim	4 Kg	01-QP1880-02	10	衬套 Guided Sleeve	69 Kg	01-QP1880-10
03	O形圈 "O"Ring	0.1 Kg	01-QP1880-03	11	挡圈 Check Ring	1 Kg	01-QP1880-11
04	逆止阀 Check Valve	3.4 Kg	01-QP1880-04	12	卡环 Retainer Ring	14.8 Kg	01-QP1880-12
05	弹簧 Spring	0.4 Kg	01-QP1880-05	13	O形圈 "O"Ring	0.08 Kg	01-QP1880-13
06	配气座 Valve Seat	76 Kg	01-QP1880-06	14	垫片 Adjuster Shim	4 Kg	01-QP1880-14
07	内缸 Inner Cylinder	54.5 Kg	01-QP1880-07	15	卡钎套 Drive Chuck	134 Kg	01-QP1880-15
08	活塞 Piston	366 Kg	01-QP1880-08	16	钻头 Drill Bit		01-QP1880-16

技术参数 / Technical Parameters

总长（不含钻头） Length(Less bit)	总重 Weight	冲击器外径 Outer Diameter	接头螺纹 Connection Thread	钻头钎柄 Bit Shank	钻孔范围 Hole Range
1957mm	1582Kg	¢445mm	API8 5/8"REG	SP1880	¢500-¢680mm

适用气压 Work Pressure	推荐转速 Recommended Rotation Speed	耗风量/Air Consumption	
		1.8Mpa	2.4Mpa
1.5-3.3 Mpa	20-40 r/min	73m³/min	97m³/min

QD/QL Valveless Series DTH Hammer

High performance valveless DTH hammer for reliable drilling in hard rock conditions.

- Stable performance
- High wear resistance
- Long service life
- Low air consumption
- Suitable for mining and construction drilling applications

www.iet-hongkong.com

QD25A

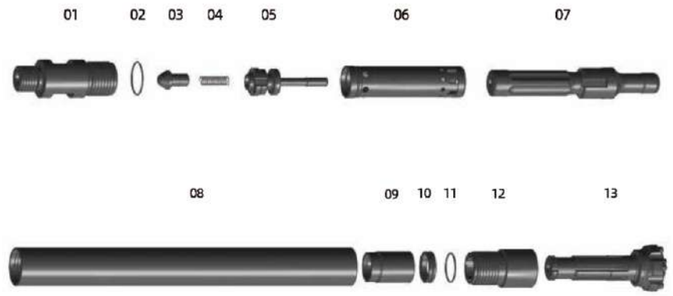

Ref.	部件 Parts	单重 Weight	件号 Part No	Ref.	部件 Parts	单重 Weight	件号 Part No
01	接头 Top Sub	3.5 Kg	01-QD25A-01	09	衬套 Guided Sleeve	0.7 Kg	01-QD25A-09
02	O形圈 "O"Ring	0.01 Kg	01-QD25A-02	10	卡环 Retainer Ring	0.1 Kg	01-QD25A-10
03	逆止阀 Check Valve	0.13 Kg	01-QD25A-03	11	O形圈 "O"Ring	0.01 Kg	01-QD25A-11
04	弹簧 Spring	0.02 Kg	01-QD25A-04	12	卡钎套 Drive Chuck	1.5 Kg	01-QD25A-12
05	配气座 Valve Seat	0.56 Kg	01-QD25A-05	13	钻头 Drill Bit		01-QD25A-13
06	内缸 Inner Cylinder	1.1 Kg	01-QD25A-06				
07	活塞 Piston	3.8 Kg	01-QD25A-07				
08	外缸 Piston Case	4.5 Kg	01-QD25A-08				

技术参数 / Technical Parameters

总长（不含钻头） Length(Less bit)	总重 Weight	冲击器外径 Outer Diameter	接头螺纹 Connection Thread	钻头钎柄 Bit Shank	钻孔范围 Hole Range
872mm	16Kg	¢71mm	T48X10X1.5	ND25A	¢76-¢90mm

适用气压 Work Pressure	推荐转速 Recommended Rotation Speed	耗风量/Air Consumption	
		1.0Mpa	1.5Mpa
1.0-1.7 Mpa	30-50 r/min	$3m^3$/min	$4.5m^3$/min

QD35A

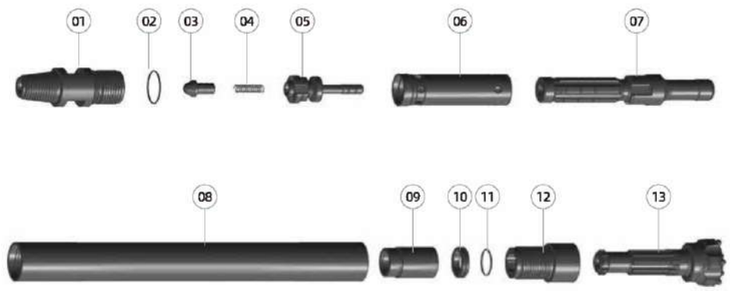

Ref.	部件 Parts	单重 Weight	件号 Part No	Ref.	部件 Parts	单重 Weight	件号 Part No
01	接头 Top Sub	4.5 Kg	01-QD35A-01	09	衬套 Guided Sleeve	0.9 Kg	01-QD35A-09
02	O形圈 "O"Ring	0.01 Kg	01-QD35A-02	10	卡环 Retainer Ring	0.15 Kg	01-QD35A-10
03	逆止阀 Check Valve	0.13 Kg	01-QD35A-03	11	O形圈 "O"Ring	0.01 Kg	01-QD35A-11
04	弹簧 Spring	0.02 Kg	01-QD35A-04	12	卡钎套 Drive Chuck	1.9 Kg	01-QD35A-12
05	配气座 Valve Seat	0.76 Kg	01-QD35A-05	13	钻头 Drill Bit		01-QD35A-13
06	内缸 Inner Cylinder	1.45 Kg	01-QD35A-06				
07	活塞 Piston	4.8 Kg	01-QD35A-07				
08	外缸 Piston Case	9.5 Kg	01-QD35A-08				

技术参数 / Technical Parameters

总长（不含钻头） Length(Less bit)	总重 Weight	冲击器外径 Outer Diameter	接头螺纹 Connection Thread	钻头钎柄 Bit Shank	钻孔范围 Hole Range
886mm	24.2Kg	¢82mm	API2 3/8"REG	ND35A	¢90-¢115mm

适用气压 Work Pressure	推荐转速 Recommended Rotation Speed	耗风量/Air Consumption	
		1.0Mpa	1.5Mpa
1.0-1.7 Mpa	30-50 r/min	4m³/min	6.5m³/min

QD45A

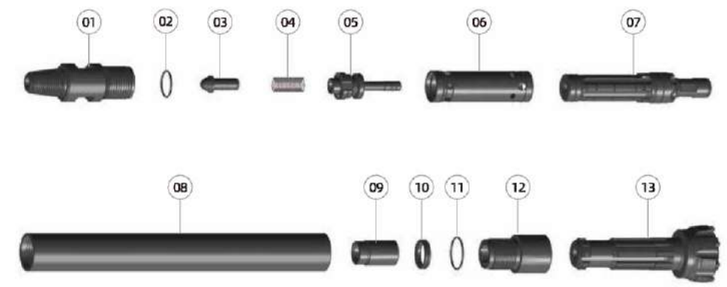

Ref.	部件 Parts	单重 Weight	件号 Part No	Ref.	部件 Parts	单重 Weight	件号 Part No
01	接头 Top Sub	8.1 Kg	01-QD45A-01	09	衬套 Guided Sleeve	1 Kg	01-QD45A-09
02	O形圈 "O"Ring	0.01 Kg	01-QD45A-02	10	卡环 Retainer Ring	0.2 Kg	01-QD45A-10
03	逆止阀 Check Valve	0.3 Kg	01-QD45A-03	11	O形圈 "O"Ring	0.01 Kg	01-QD45A-11
04	弹簧 Spring	0.04 Kg	01-QD45A-04	12	卡钎套 Drive Chuck	3.6 Kg	01-QD45A-12
05	配气座 Valve Seat	1.5 Kg	01-QD45A-05	13	钻头 Drill Bit		01-QD45A-13
06	内缸 Inner Cylinder	2.1 Kg	01-QD45A-06				
07	活塞 Piston	8.4 Kg	01-QD45A-07				
08	外缸 Piston Case	15 Kg	01-QD45A-08				

技术参数 / Technical Parameters

总长（不含钻头） Length(Less bit)	总重 Weight	冲击器外径 Outer Diameter	接头螺纹 Connection Thread	钻头钎柄 Bit Shank	钻孔范围 Hole Range
986mm	40.5Kg	¢99mm	API2 3/8"REG	ND45A	¢110-¢135mm

适用气压 Work Pressure	推荐转速 Recommended Rotation Speed	耗风量/Air Consumption	
		1.0Mpa	1.8Mpa
1.0-2.2 Mpa	30-60 r/min	5m³/min	9m³/min

QD55A

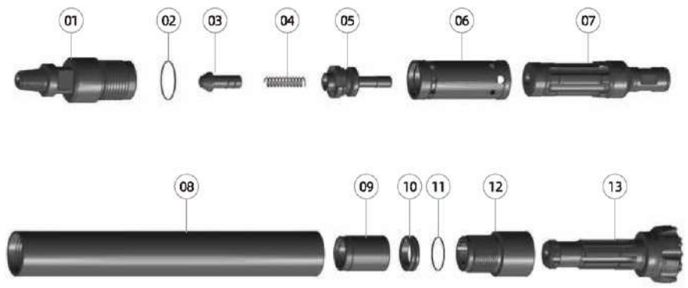

Ref.	部件 Parts	单重 Weight	件号 Part No	Ref.	部件 Parts	单重 Weight	件号 Part No
01	接头 Top Sub	14 Kg	01-QD55A-01	09	衬套 Guided Sleeve	2.64 Kg	01-QD55A-09
02	O形圈 "O"Ring	0.01 Kg	01-QD55A-02	10	卡环 Retainer Ring	0.5 Kg	01-QD55A-10
03	逆止阀 Check Valve	0.6 Kg	01-QD55A-03	11	O形圈 "O"Ring	0.01 Kg	01-QD55A-11
04	弹簧 Spring	0.06 Kg	01-QD55A-04	12	卡钎套 Drive Chuck	7 Kg	01-QD55A-12
05	配气座 Valve Seat	2.15 Kg	01-QD55A-05	13	钻头 Drill Bit		01-QD55A-13
06	内缸 Inner Cylinder	3.3 Kg	01-QD55A-06				
07	活塞 Piston	15.5 Kg	01-QD55A-07				
08	外缸 Piston Case	24.2 Kg	01-QD55A-08				

技术参数 / Technical Parameters

总长（不含钻头） Length(Less bit)	总重 Weight	冲击器外径 Outer Diameter	接头螺纹 Connection Thread	钻头钎柄 Bit Shank	钻孔范围 Hole Range
1122mm	70Kg	¢126mm	API2 3/8"REG	ND55A	¢136-¢155mm

适用气压 Work Pressure	推荐转速 Recommended Rotation Speed	耗风量/Air Consumption	
		1.0Mpa	1.5Mpa
1.0-2.5 Mpa	30-60 r/min	7m³/min	13m³/min

QD55S

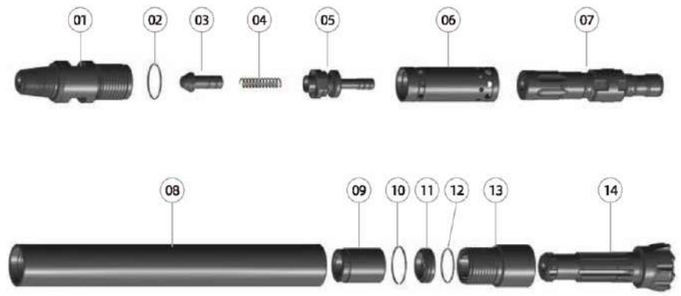

Ref.	部件 Parts	单重 Weight	件号 Part No	Ref.	部件 Parts	单重 Weight	件号 Part No
01	接头 Top Sub	13.5 Kg	01-QD55S-01	09	衬套 Guided Sleeve	2.3 Kg	01-QD55S-09
02	O形圈 "O"Ring	0.01 Kg	01-QD55S-02	10	挡圈 Check Ring	0.02 Kg	01-QD55S-10
03	逆止阀 Check Valve	0.6 Kg	01-QD55S-03	11	卡环 Retainer Ring	0.5 Kg	01-QD55S-11
04	弹簧 Spring	0.06 Kg	01-QD55S-04	12	O形圈 "O"Ring	0.01 Kg	01-QD55S-12
05	配气座 Valve Seat	1.85 Kg	01-QD55S-05	13	卡钎套 Drive Chuck	5.8 Kg	01-QD55S-13
06	内缸 Inner Cylinder	3.1 Kg	01-QD55S-06	14	钻头 Drill Bit		01-QD55S-14
07	活塞 Piston	11.8 Kg	01-QD55S-07				
08	外缸 Piston Case	22.5 Kg	01-QD55S -08				

技术参数 / Technical Parameters

总长（不含钻头） Length(Less bit)	总重 Weight	冲击器外径 Outer Diameter	接头螺纹 Connection Thread	钻头钎柄 Bit Shank	钻孔范围 Hole Range
1119mm	62Kg	¢117mm	API3 1/2"REG	ND55S	¢127-¢145mm

适用气压 Work Pressure	推荐转速 Recommended Rotation Speed	耗风量/Air Consumption	
		1.0Mpa	1.5Mpa
1.0-2.5 Mpa	30-60 r/min	6m³/min	12m³/min

QP681

(QD65A)

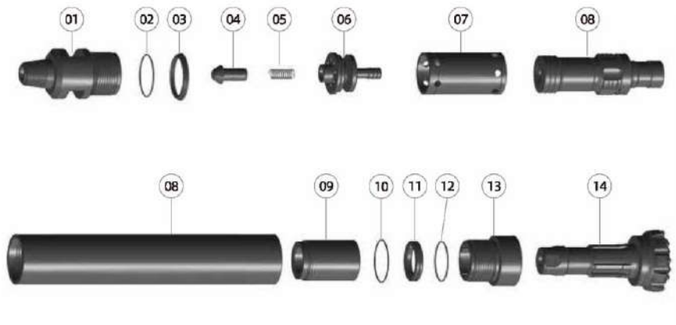

Ref.	部件 Parts	单重 Weight	件号 Part No	Ref.	部件 Parts	单重 Weight	件号 Part No
01	接头 Top Sub	21.5 Kg	01-QP681-01	09	外缸 Piston Case	36.5 kg	01-QP681-09
02	O形圈 "O"Ring	0.01 Kg	01-QP681-02	10	衬套 Guided Sleeve	6.3 kg	01-QP681-10
03	碟簧 Disc Spring	0.34 Kg	01-QP681-03	11	挡圈 Check Ring	0.02 kg	01-QP681-11
04	逆止阀 Check Valve	0.56 Kg	01-QP681-04	12	卡环 Retainer Ring	1 kg	01-QP681-12
05	弹簧 Spring	0.05 Kg	01-QP681-05	13	O形圈 "O"Ring	0.01 Kg	01-QP681-13
06	配气座 Valve Seat	4.3 Kg	01-QP681-06	14	卡钎套 Drive Chuck	8.2 kg	01-QP681-14
07	内缸 Inner Cylinder	4.2 Kg	01-QP681-07	15	钻头 Drill Bit		01-QP681-15
08	活塞 Piston	23 Kg	01-QP681-08				

技术参数 / Technical Parameters

总长（不含钻头） Length(Less bit)	总重 Weight	冲击器外径 Outer Diameter	接头螺纹 Connection Thread	钻头钎柄 Bit Shank	钻孔范围 Hole Range
1210mm	106Kg	¢148mm	API3 1/2"REG	ND65A	¢158-¢203mm

适用气压 Work Pressure	推荐转速 Recommended Rotation Speed	耗风量/Air Consumption	
		1.8Mpa	2.4Mpa
1.2-2.5 Mpa	30-60 r/min	16m³/min	23m³/min

QP781

(QD75A)

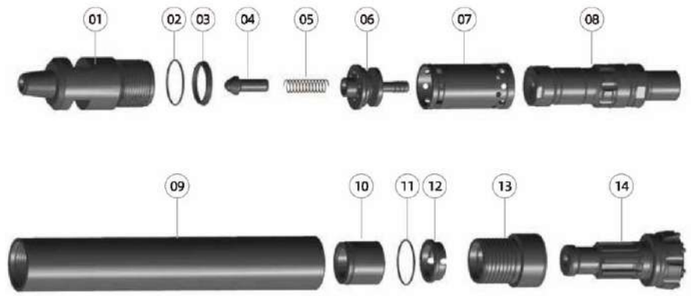

Ref.	部件 Parts	单重 Weight	件号 Part No	Ref.	部件 Parts	单重 Weight	件号 Part No
01	接头 Top Sub	31.2 Kg	01-QP781-01	09	外缸 Piston Case	47 kg	01-QP781-09
02	O形圈 "O"Ring	0.01 Kg	01-QP781-02	10	衬套 Guided Sleeve	5.65 kg	01-QP781-10
03	碟簧 Disc Spring	0.5 Kg	01-QP781-03	11	挡圈 Check Ring	0.02 kg	01-QP781-11
04	逆止阀 Check Valve	0.65 Kg	01-QP781-04	12	卡环 Retainer Ring	1.3 kg	01-QP781-12
	弹簧 Spring	0.09 Kg	01-QP781-05	13	卡钎套 Drive Chuck	11.5 kg	01-QP781-13
06	配气座 Valve Seat	5.5 Kg	01-QP781-06	14	钻头 Drill Bit		01-QP781-14
07	内缸 Inner Cylinder	5.5 Kg	01-QP781-07				
08	活塞 Piston	34.5 Kg	01-QP781 -08				

技术参数 / Technical Parameters

总长（不含钻头） Length(Less bit)	总重 Weight	冲击器外径 Outer Diameter	接头螺纹 Connection Thread	钻头钎柄 Bit Shank	钻孔范围 Hole Range
1225mm	143.5Kg	¢165mm	API3 1/2"REG	ND75A	¢178-¢216mm

适用气压 Work Pressure	推荐转速 Recommended Rotation Speed	耗风量/Air Consumption	
		1.8Mpa	2.4Mpa
1.5-2.8 Mpa	30-60 r/min	21m³/min	28m³/min

QP880
(QD85A)

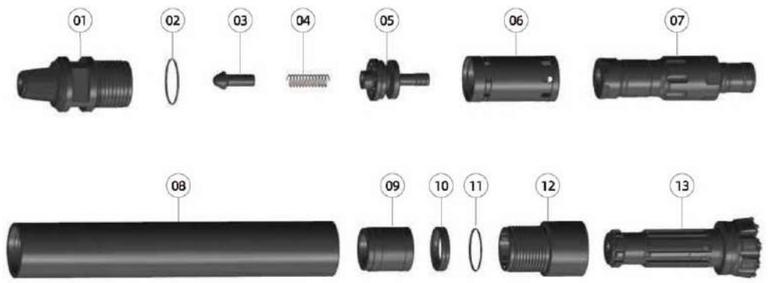

Ref.	部件 Parts	单重 Weight	件号 Part No	Ref.	部件 Parts	单重 Weight	件号 Part No
01	接头 Top Sub	38.5 Kg	01-QP880-01	09	衬套 Guided Sleeve	6.1 kg	01-QP880-09
02	O形圈 "O"Ring	0.02 Kg	01-QP880-02	10	卡环 Retainer Ring	1.2 kg	01-QP880-10
03	逆止阀 Check Valve	0.65 Kg	01-QP880-03	11	O形圈 "O"Ring	0.01 Kg	01-QP880-11
04	弹簧 Spring	0.1 Kg	01-QP880-04	12	卡钎套 Drive Chuck	19.3 kg	01-QP880-12
05	配气座 Valve Seat	6.2 Kg	01-QP880-05	13	钻头 Drill Bit		01-QP880-13
06	内缸 Inner Cylinder	7.4 Kg	01-QP880-06				
07	活塞 Piston	44.5 Kg	01-QP880-07				
08	外缸 Piston Case	69.5 Kg	01-QP880-08				

技术参数 / Technical Parameters

总长（不含钻头） Length(Less bit)	总重 Weight	冲击器外径 Outer Diameter	接头螺纹 Connection Thread	钻头钎柄 Bit Shank	钻孔范围 Hole Range
1354mm	193Kg	¢185mm	API4 1/2"REG	ND85A	¢198-¢254mm

适用气压 Work Pressure	推荐转速 Recommended Rotation Speed	耗风量/Air Consumption	
		1.8Mpa	2.4Mpa
1.5-3.3 Mpa	30-60 r/min	25m³/min	34m³/min

QP1081
(N100A)

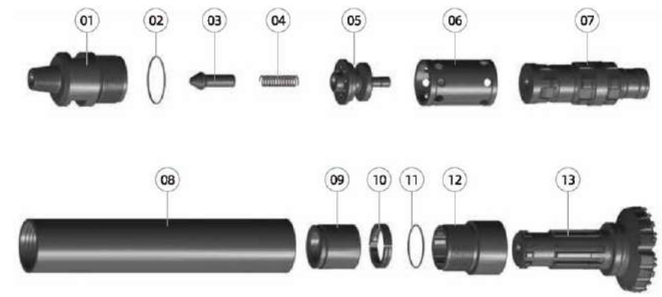

Ref.	部件 Parts	单重 Weight	件号 Part No	Ref.	部件 Parts	单重 Weight	件号 Part No
01	接头 Top Sub	62 Kg	01-QP1081-01	09	衬套 Guided Sleeve	11.5 kg	01-QP1081-09
02	O形圈 "O"Ring	0.02 Kg	01-QP1081-02	10	卡环 Retainer Ring	2.2 kg	01-QP1081-10
03	逆止阀 Check Valve	1.5 Kg	01-QP1081-03	11	O形圈 "O"Ring	0.02 Kg	01-QP1081-11
04	弹簧 Spring	0.20 Kg	01-QP1081-04	12	卡钎套 Drive Chuck	26 kg	01-QP1081-12
05	配气座 Valve Seat	13.5 Kg	01-QP1081-05	13	钻头 Drill Bit		01-QP1081-13
06	内缸 Inner Cylinder	13 Kg	01-QP1081-06				
07	活塞 Piston	71.5 Kg	01-QP1081-07				
08	外缸 Piston Case	98 Kg	01-QP1081-08				

技术参数 / Technical Parameters

总长（不含钻头） Length(Less bit)	总重 Weight	冲击器外径 Outer Diameter	接头螺纹 Connection Thread	钻头钎柄 Bit Shank	钻孔范围 Hole Range
1475mm	299.5Kg	¢225mm	API5 1/2"REG	NUMA100A	¢254-¢311mm

适用气压 Work Pressure	推荐转速 Recommended Rotation Speed	耗风量/Air Consumption	
		1.8Mpa	2.4Mpa
1.5-3.3 Mpa	25~50 r/min	36m³/min	58m³/min

N125A

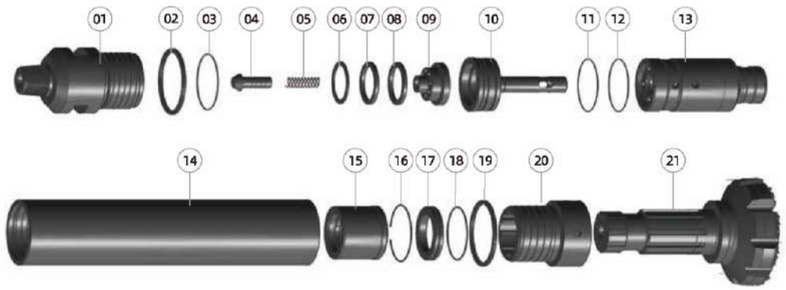

Ref.	部件 Parts	单重 Weight	件号 Part No	Ref.	部件 Parts	单重 Weight	件号 Part No
01	接头 Top Sub	163.5 Kg	01-N125A-01	12	O形圈 "O"Ring	0.03 Kg	01-N125A-12
02	垫圈 Washer	1.5 Kg	01-N125A-02	13	活塞 Piston	137.7Kg	01-N125A-13
03	O形圈 "O"Ring	0.03 Kg	01-N125A-03	14	外缸 Piston Case	247.5Kg	01-N125A-14
04	逆止阀 Check Valve	1.5 Kg	01-N125A-04	15	衬套 Guided Sleeve	29.7 Kg	01-N125A-15
05	弹簧 Spring	0.2 Kg	01-N125A-05	16	挡圈 Check Ring	0.2 Kg	01-N125A-16
06	垫片 Adjuster Shim	0.7 Kg	01-N125A-06	17	卡环 Retainer Ring	7 Kg	01-N125A-17
07	橡胶垫 Rubber Buffer	0.3 Kg	01-N125A-07	18	O形圈 "O"Ring	0.3 Kg	01-N125A-18
08	橡胶垫 Rubber Buffer	0.3 Kg	01-N125A-08	19	垫圈 Washer	1.5 Kg	01-N125A-19
09	配气座 Valve Seat	11.8 Kg	01-N125A-09	20	卡钎套 Drive Chuck	67.2 Kg	01-N125A-20
10	配气杆 Rigid Valve	27.4 Kg	01-N125A-10	21	钻头 Drill Bit		01-N125A-21
11	O形圈 "O"Ring	0.03 Kg	01-N125A-11				

技术参数 / Technical Parameters

总长（不含钻头） Length(Less bit)	总重 Weight	冲击器外径 Outer Diameter	接头螺纹 Connection Thread	钻头钎柄 Bit Shank	钻孔范围 Hole Range
1785mm	698.5Kg	¢305mm	API6 5/8"REG	NUMA125A	¢330- ¢400mm

适用气压 Work Pressure	推荐转速 Recommended Rotation Speed	耗风量/Air Consumption	
		1.8Mpa	2.4Mpa
1.5-3.3 Mpa	25～45 r/min	46m³/min	58m³/min

QP330
(QD140A)

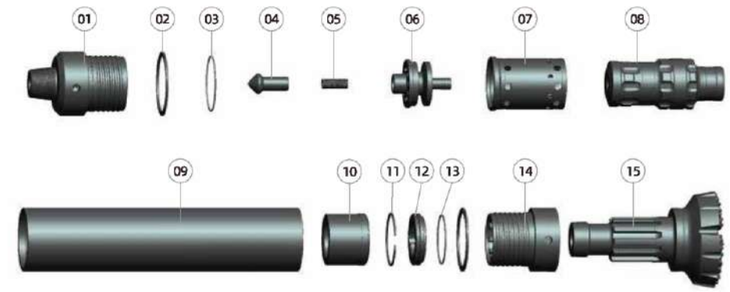

Ref.	部件 Parts	单重 Weight	件号 Part No	Ref.	部件 Parts	单重 Weight	件号 Part No
01	接头 Top Sub	160 Kg	01-QP330-01	09	外缸 Piston Case	317 Kg	01-QP330-09
02	垫片 Adjuster Shim	1.5 Kg	01-QP330-02	10	衬套 Guided Sleeve	43.5 Kg	01-QP330-10
03	O形圈 "O"Ring	0.05 Kg	01-QP330-03	11	挡圈 Check Ring	0.5 Kg	01-QP330-11
04	逆止阀 Check Valve	3.4 Kg	01-QP330-04	12	卡环 Retainer Ring	12.4 Kg	01-QP330-12
05	弹簧 Spring	0.4 Kg	01-QP330-05	13	O形圈 "O"Ring	0.03 Kg	01-QP330-13
06	配气座 Valve Seat	31.5 Kg	01-QP330-06	14	垫片 Adjuster Shim	1.9 Kg	01-QP330-14
07	内缸 Inner Cylinder	28.7 Kg	01-QP330-07	15	卡钎套 Drive Chuck	77.4 Kg	01-QP330-15
08	活塞 Piston	173 Kg	01-QP330-08	16	钻头 Drill Bit		01-QP330-16

技术参数 / Technical Parameters

总长（不含钻头） Length(Less bit)	总重 Weight	冲击器外径 Outer Diameter	接头螺纹 Connection Thread	钻头钎柄 Bit Shank	钻孔范围 Hole Range
1861mm	851Kg	¢332mm	API7 5/8"REG	SP330	¢350- ¢550mm

适用气压 Work Pressure	推荐转速 Recommended Rotation Speed	耗风量/Air Consumption	
		1.8Mpa	2.4Mpa
1.5-3.3 Mpa	25～45 r/min	53m³/min	76m³/min

QL40A

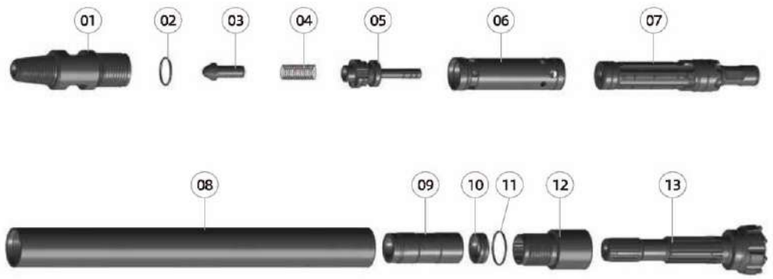

Ref.	部件 Parts	单重 Weight	件号 Part No	Ref.	部件 Parts	单重 Weight	件号 Part No
01	接头 Top Sub	8.1 Kg	01-Ql40A-01	09	衬套 Guided Sleeve	2.3 Kg	01-QL40A-09
02	O形圈 "O"Ring	0.01 Kg	01-QL40A-02	10	卡环 Retainer Ring	0.27 Kg	01-QL40A-10
03	逆止阀 Check Valve	0.3 Kg	01-QL40A-03	11	O形圈 "O"Ring	0.01 Kg	01-QL40A-11
04	弹簧 Spring	0.04 Kg	01-QL40A-04	12	卡钎套 Driver Chuck	3.3 Kg	01-QL40A-12
05	配气座 Valve Seat	1.5 Kg	01-ND45A-05	13	钻头 Drill Bit		01-QL40A-13
06	内缸 Inner Cylinder	2.1 Kg	01-QL40A-06				
07	活塞 Piston	8.4 Kg	01-QL40A-07				
08	外缸 Piston Case	16.4 Kg	01-QL40A-08				

技术参数 / Technical Parameters

总长（不含钻头） Length(Less bit)	总重 Weight	冲击器外径 Outer Diameter	接头螺纹 Connection Thread	钻头钎柄 Bit Shank	钻孔范围 Hole Range
1057mm	42.7Kg	¢99mm	API2 3/8"REG	QL40A	¢110-¢135mm

适用气压 Work Pressure	推荐转速 Recommended Rotation Speed	耗风量/Air Consumption	
		1.0Mpa	1.8Mpa
1.0-2.2 Mpa	30-60 r/min	$5m^3$/min	$9m^3$/min

QL50A

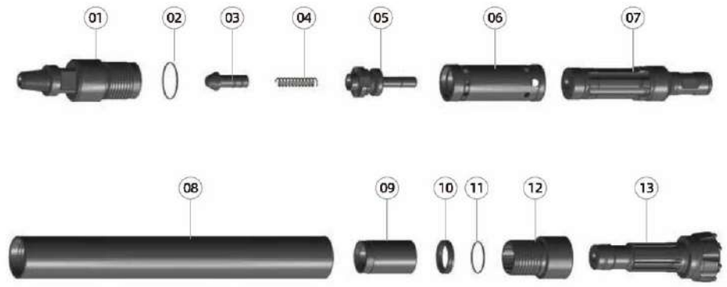

Ref.	部件 Parts	单重 Weight	件号 Part No	Ref.	部件 Parts	单重 Weight	件号 Part No
01	接头 Top Sub	14 Kg	01-QL50A-01	09	衬套 Guided Sleeve	2.75 Kg	01-QL50A-09
02	O形圈 "O"Ring	0.01 Kg	01-QL50A-02	10	卡环 Retainer Ring	0.45 Kg	01-QL50A-10
03	逆止阀 Check Valve	0.6 Kg	01-QL50A-03	11	O形圈 "O"Ring	0.01 Kg	01-QL50A-11
04	弹簧 Spring	0.06 Kg	01-QL50A-04	12	卡钎套 Drive Chuck	5.4 Kg	01-QL50A-12
05	配气座 Valve Seat	2.15 Kg	01-QL50A-05	13	钻头 Drill Bit		01-QL50A-13
06	内缸 Inner Cylinder	3.3 Kg	01-QL50A-06				
07	活塞 Piston	15.5 Kg	01-QL50A-07				
08	外缸 Piston Case	24.2 Kg	01-QL50A-08				

技术参数 / Technical Parameters

总长（不含钻头） Length(Less bit)	总重 Weight	冲击器外径 External Diameter	接头螺纹 Connection Thread	钻头钎柄 Bit Shank	钻孔范围 Hole Range
1102mm	68.5Kg	¢126mm	API2 3/8"REG	QL50A	¢136-¢155mm

适用气压 Work Pressure	推荐转速 Recommended Rotation Speed	耗风量/Air Consumption	
		1.0Mpa	1.8Mpa
1.0-2.5 Mpa	30-60 r/min	$7m^3$/min	$13m^3$/min

QL680

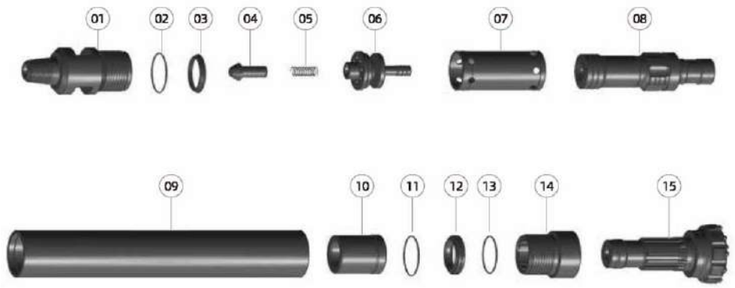

Ref.	部件 Parts	单重 Weight	件号 Part No	Ref.	部件 Parts	单重 Weight	件号 Part No
01	接头 Top Sub	21.5 Kg	01-QL680-01	09	外缸 Piston Case	34.3 Kg	01-QL680-09
02	O形圈 "O"Ring	0.01 Kg	01-QL680-02	10	衬套 Guided Sleeve	5.4 Kg	01-QL680-10
03	碟簧 Disc Spring	0.34 Kg	01-QL680-03	11	挡圈 Check Ring	0.02 Kg	01-QL680-11
04	逆止阀 Check Valve	0.56 Kg	01-QL680-04	12	卡环 Retainer Ring	0.92 Kg	01-QL680-12
05	弹簧 Spring	0.05 Kg	01-QL680-05	13	O形圈 "O"Ring	0.01 Kg	01-QL680-13
06	配气座 Valve Seat	4.3 Kg	01-QL680-06	14	卡钎套 Drive Chuck	7.5 Kg	01-QL680-14
07	内缸 Inner Cylinder	4.2 Kg	01-QL680-07	15	钻头 Drill Bit		01-QL680-15
08	活塞 Piston	23 Kg	01-QL680-08				

技术参数 / Technical Parameters

总长（不含钻头）Length(Less bit)	总重 Weight	冲击器外径 External Diameter	接头螺纹 Connection Thread	钻头钎柄 Bit Shank	钻孔范围 Hole Range
1155mm	102Kg	¢148mm	API3 1/2"REG	QL60A	¢158-¢203mm

适用气压 Work Pressure	推荐转速 Recommended Rotation Speed	耗风量/Air Consumption	
		1.8Mpa	2.4Mpa
1.2-2.7 Mpa	30~60 r/min	16m³/min	23m³/min

QL880

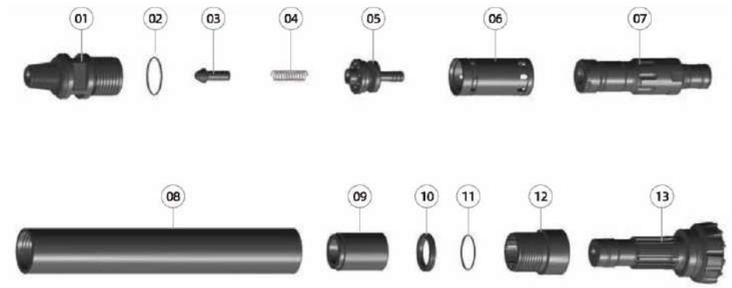

Ref.	部件 Parts	单重 Weight	件号 Part No	Ref.	部件 Parts	单重 Weight	件号 Part No
01	接头 Top Sub	38.5 Kg	01-QL880-01	09	衬套 Guided Sleeve	10.5 kg	01-QL880-09
02	O形圈 "O"Ring	0.02 Kg	01-QL880-02	10	卡环 Retainer Ring	1.2 kg	01-QL880-10
03	逆止阀 Check Valve	0.65 Kg	01-QL880-03	11	O形圈 "O"Ring	0.01 Kg	01-QL880-11
04	弹簧 Spring	0.1 Kg	01-QL880-04	12	卡钎套 Drive Chuck	14.5 kg	01-QL880-12
05	配气座 Valve Seat	6.2 Kg	01-QL880-05	13	钻头 Drill Bit		01-QL880-13
06	内缸 Inner Cylinder	7.4 Kg	01-QL880-06				
07	活塞 Piston	44.5 Kg	01-QL880-07				
08	外缸 Piston Case	64.5 Kg	01-QL880-08				

技术参数 / Technical Parameters

总长（不含钻头）Length(Less bit)	总重 Weight	冲击器外径 External Diameter	接头螺纹 Connection Thread	钻头钎柄 Bit Shank	钻孔范围 Hole Range
1335mm	188Kg	¢185mm	API4 1/2"REG	QL80A	¢198-¢254mm

适用气压 Work Pressure	推荐转速 Recommended Rotation Speed	耗风量/Air Consumption	
			2.4Mpa
1.5-3.3 Mpa	30~60 r/min	25m³/min	34m³/min

ND/QL Series
DTH Hammer with Foot Valve

This high air pressure DTH hammer working with foot valve

MAIN FEATURES:

- Simple design of the piston, long life span.
- More efficient energy transfer, faster drilling speed, lower air consumption and lower oil consumption.
- Fewer internal parts, simple structure, long life span, less failure and easier to maintain because all the parts are heat treated.
- Easy to disassemble because the top sub, the drive chuck and the external cylinder are connected by multiple steps thread.

DHD3.5

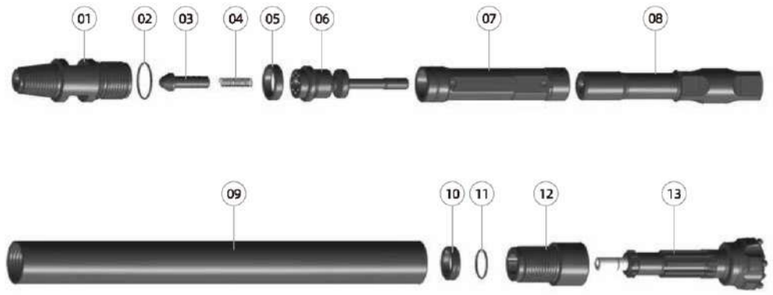

Ref.	部件 Parts	单重 Weight	件号 Part No.	Ref.	部件 Parts	单重 Weight	件号 Part No.
01	接头 Top Sub	4.4 Kg	01-DHD3.5-01	09	外缸 Piston Case	9.5 Kg	01-DHD3.5-09
02	O形圈 "O"Ring	0.01 Kg	01-DHD3.5-02	10	卡环 Retainer Ring	0.1 Kg	01-DHD3.5-10
03	逆止阀 Check Valve	0.2 Kg	01-DHD3.5-03	11	O形圈 O Ring of Top Sub	0.01 Kg	01-DHD3.5-11
04	弹簧 Spring	0.02 Kg	01-DHD3.5-04	12	卡钎套 Drive Chuckk	2.1 Kg	01-DHD3.5-12
05	橡胶垫 Rubber Buffer	0.02 Kg	01-DHD3.5-05	13	钻头 Drill Bit		01-DHD3.5-13
06	配气座 Valve Seatt	1.4 Kg	01-DHD3.5-06				
07	内缸 Inner Cylinder	1.7 Kg	01-DHD3.5-07				
08	活塞 Piston	5.6 Kg	01-DHD3.5-08				

技术参数 / Technical Parameters

总长（不含钻头）Length(Less bit)	总重 Weight	冲击器外径 Outer Diameter	接头螺纹 Connection Thread	钻头钎柄 Bit Shank	钻孔范围 Hole Range
928mm	25Kg	¢82mm	API2 3/8"REG	DHD3.5	¢90- ¢110mm

工作风压 working pressure	推荐转速 Recommended rotation speed	耗风量/Air Consumption	
		1.0Mpa	1.5Mpa
1.0-1.7 Mpa	30-60 r/min	4.5m³/min	8.5m³/min

DHD340

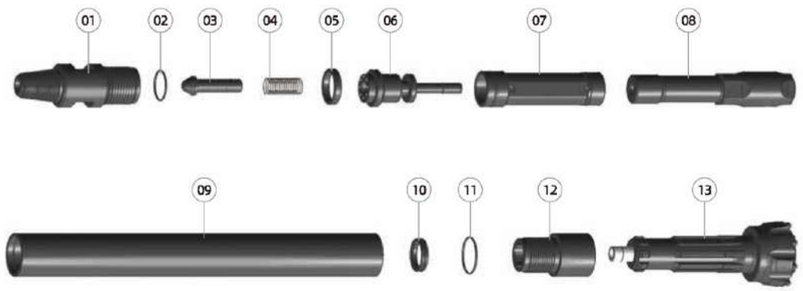

Ref.	部件 Parts	单重 Weight	件号 Part No.	Ref.	部件 Parts	单重 Weight	件号 Part No.
01	接头 Top Sub	8.8 Kg	01-DHD340-01	09	外缸 Piston Case	15.9 Kg	01-DHD340-09
02	O形圈 "O"Ring	0.01 Kg	01-DHD340-02	10	卡环 Retainer Ring	0.2 Kg	01-DHD340-10
03	逆止阀 Check Valve	0.46 Kg	01-DHD340-03	11	O形圈 "O"Ring	0.01 Kg	01-DHD340-11
04	弹簧 Spring	0.04 Kg	01-DHD340-04	12	卡钎套 Drive Chuckk	3.7 Kg	01-DHD340-12
05	橡胶垫 Rubber Buffer	0.2 Kg	01-DHD340-05	13	钻头 Drill Bit		01-DHD340-13
06	配气座 Valve Seat	2.1 Kg	01-DHD340-06				
07	内缸 Inner Cylinder	2.45 Kg	01-DHD340-07				
08	活塞 Piston	9 Kg	01-DHD340-08				

技术参数 / Technical Parameters

总长（不含钻头）Length(Less bit)	总重 Weight	冲击器外径 Outer Diameter	接头螺纹 Connection Thread	钻头钎柄 Bit Shank	钻孔范围 Hole Range
1032mm	43Kg	¢99mm	API2 3/8"REG	DHD340	¢110-¢135mm

适用气压 Work Pressure	推荐转速 Recommended rotation speed	耗风量/Air Consumption	
		1.0Mpa	1.8Mpa
1.0-2.2 Mpa	30-60 r/min	5.5m³/min	10m³/min

DHD350

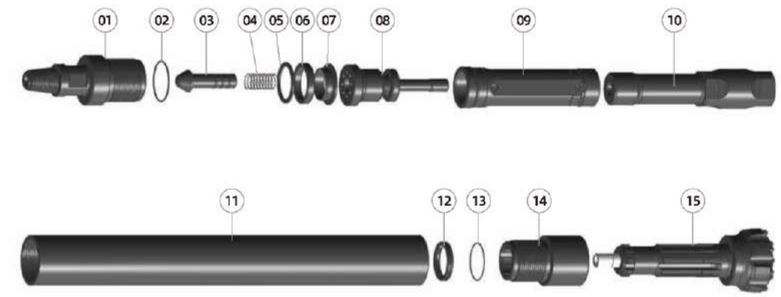

Ref.	部件 Parts	单重 Weight	件号 Part No.	Ref.	部件 Parts	单重 Weight	件号 Part No.
01	接头 Top Sub	14.7 Kg	01-DHD350-01	09	内缸 Inner Cylinde	4.9 Kg	01-DHD350-09
02	O形圈 "O"Ring	0.02 Kg	01-DHD350-02	10	活塞 Piston	15.5 Kg	01-DHD350-10
03	逆止阀 Check Valve	1 Kg	01-DHD350-03	11	外缸 Piston Case	30.3 Kg	01-DHD350-11
04	弹簧 Spring	0.06 Kg	01-DHD350-04	12	卡环 Retainer Ring	0.3 Kg	01-DHD350-12
05	调整圈 Adjuster Ring	0.1 Kg	01-DHD350-05	13	O形圈 "O"Ring	0.01 Kg	01-DHD350-13
06	橡胶垫 Rubber Buffer	0.06 Kg	01-DHD350-06	14	卡钎套 Drive Chuckk	7.1 Kg	01-DHD350-14
07	垫座 Ring Lock	0.2 Kg	01-DHD350-07	15	钻头 Drill Bit		01-DHD350-15
08	配气座 Valve Seat	4.2 Kg	01-DHD350-08				

技术参数 / Technical Parameters

总长（不含钻头）Length(Less bit)	总重 Weight	冲击器外径 Outer Diameter	接头螺纹 Connection Thread	钻头钎柄 Bit Shank	钻孔范围 Hole Range
1209mm	78.5Kg	¢125mm	API2 3/8"REG	DHD350	¢135-¢155mm

适用气压 Work Pressure	推荐转速 Recommended rotation speed	耗风量/Air Consumption	
		1.0Mpa	1.8Mpa
1.0-2.5 Mpa	30-60 r/min	9m³/min	15m³/min

DHD360

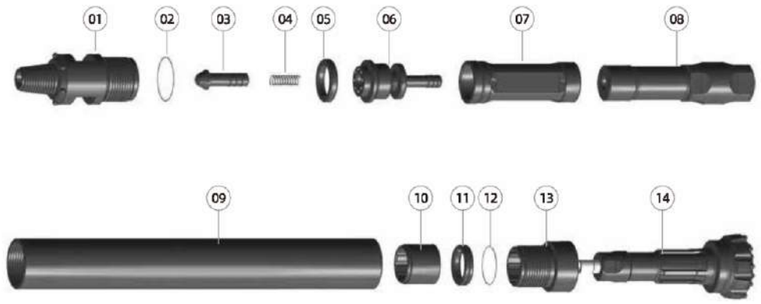

Ref.	部件 Parts	单重 Weight	件号 Part No.	Ref.	部件 Parts	单重 Weight	件号 Part No.
01	接头 Top Sub	20.3 Kg	01-ND45A-01	09	外缸 Piston Case	37.2 Kg	01-DHD360-09
02	O形圈 "O"Ring	0.02 Kg	01-ND45A-02	10	衬套 Guided Sleeve	2.5 Kg	01-DHD360-10
03	逆止阀 Check Valve	0.8 Kg	01-ND45A-03	11	卡环 Retainer Ring	0.6 Kg	01-DHD360-11
04	弹簧 Spring	0.05 Kg	01-ND45A-04	12	O形圈 "O"Ring	0.02 Kg	01-DHD360-12
05	橡胶垫 Rubber Buffer	0.3 Kg	01-ND45A-05	13	卡钎套 Drive Chuckk	6 Kg	01-DHD360-13
06	内缸 Inner Cylinder	5 Kg	01-ND45A-06	14	钻头 Drill Bit		01-DHD360-14
07	活塞 Piston	4 Kg	01-ND45A-07				
08	外缸 Piston Case	23.5 Kg	01-ND45A-08				

技术参数 / Technical Parameters

总长（不含钻头）Length(Less bit)	总重 Weight	冲击器外径 Outer Diameter	接头螺纹 Connection Thread	钻头钎柄 Bit Shank	钻孔范围 Hole Range
1063mm	100.5Kg	¢142mm	API3 1/2"REG	DHD360	¢150- ¢190mm

适用气压 Work Pressure	推荐转速 Recommended rotation speed	耗风量/Air Consumption	
		1.0Mpa	1.8Mpa
1.0-2.5 Mpa	30-60 r/min	20m³/min	28m³/min

DHD380

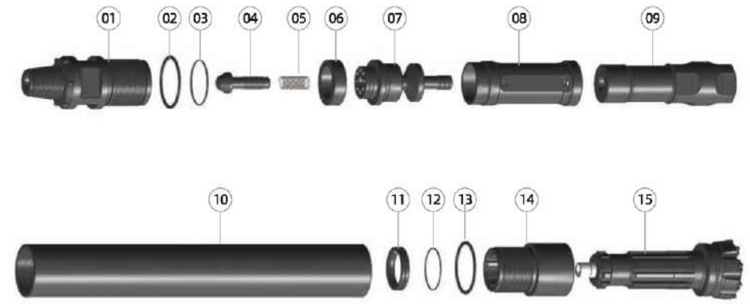

Ref.	部件 Parts	单重 Weight	件号 Part No.	Ref.	部件 Parts	单重 Weight	件号 Part No.
01	接头 Top Sub	42 Kg	01-DHD380-01	09	活塞 Piston	41.5 Kg	01-DHD380-09
02	垫片 Adjuster Shim	0.2 Kg	01-DHD380-02	10	外缸 Piston Case	62.5 Kg	01-DHD380-10
03	O形圈 "O"Ring	0.02 Kg	01-DHD380-03	11	卡环 Retainer Ring	1.2 Kg	01-DHD380-11
04	逆止阀 Check Valve	1.3 Kg	01-DHD380-04	12	O形圈 "O"Ring	0.02 Kg	01-DHD380-12
05	弹簧 Spring	0.09 Kg	01-DHD380-05	13	垫片 Adjuster Shim	0.2 Kg	01-DHD380-13
06	橡胶垫 Rubber Buffer	0.4 Kg	01-DHD380-06	14	卡钎套 Drive Chuckk	18.2 Kg	01-DHD380-14
07	配气座 Valve Seat	13 Kg	01-DHD380-07	15	钻头 Drill Bit		01-DHD380-15
08	内缸 Inner Cylinder	9.1 Kg	01-DHD380-08				

技术参数 / Technical Parameters

总长（不含钻头）Length(Less bit)	总重 Weight	冲击器外径 Outer Diameter	接头螺纹 Connection Thread	钻头钎柄 Bit Shank	钻孔范围 Hole Range
1492mm	190Kg	¢180mm	API4 1/2"REG	DHD380	¢195- ¢254mm

适用气压 Work Pressure	推荐转速 Recommended rotation speed	耗风量/Air Consumption	
		1.8Mpa	2.4Mpa
1.5-3.3 Mpa	30-60 r/min	26m³/min	34m³/min

NUMA100

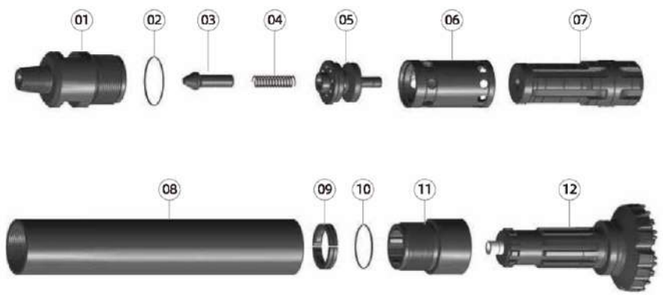

Ref.	部件 Parts	单重 Weight	件号 Part No.	Ref.	部件 Parts	单重 Weight	件号 Part No.
01	接头 Top Sub	60 kg	01-NUMA100-01	09	卡环 Retainer Ring	2.2 kg	01-NUMA100-09
02	O形圈 "O"Ring	0.03 kg	01-NUMA100-02	10	O形圈 "O"Ring	0.02 kg	01-NUMA100-10
03	逆止阀 Check Valve	1.5 kg	01-NUMA100-03	11	卡钎套 Drive Chuckk	27 kg	01-NUMA100-11
04	弹簧 Spring	0.2 kg	01-NUMA100-04	12	钻头 Drill Bit		01-NUMA100-12
05	配气座 Valve Seatt	12.8 kg	01-NUMA100-05				
06	内缸 Inner Cylinder	13.5 kg	01-NUMA100-06				
07	活塞 Piston	71 kg	01-NUMA100-07				
08	外缸 Piston Case	94.5 kg	01-NUMA100-08				

技术参数 / Technical Parameters

总长（不含钻头）Length(Less bit)	总重 Weight	冲击器外径 Outer Diameter	接头螺纹 Connection Thread	钻头钎柄 Bit Shank	钻孔范围 Hole Range
1432mm	283Kg	¢225mm	API5 1/2"REG	NUMA100	¢254-¢311mm

适用气压 Work Pressure	推荐转速 Recommended rotation speed	耗风量/Air Consumption	
		1.8Mpa	2.4Mpa
1.5-3.3 Mpa	25～50 r/min	40m³/min	60m³/min

DHD1120

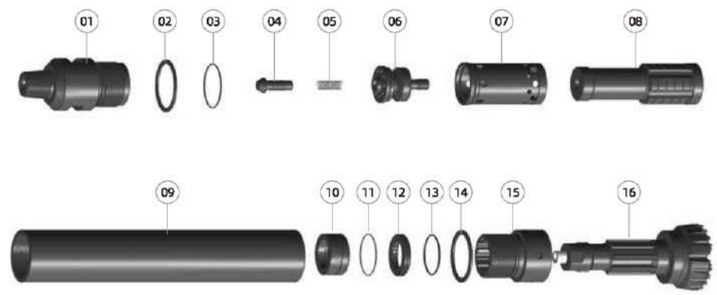

Ref.	部件 Parts	单重 Weight	件号 Part No.	Ref.	部件 Parts	单重 Weight	件号 Part No.
01	接头 Top Sub	134 kg	01-DHD1120-01	09	外缸 Piston Case	220 Kg	01-DHD1120-09
02	垫片 Adjuster Shim	0.8 kg	01-DHD1120-02	10	衬套 Guided Sleeve	12 Kg	01-DHD1120-10
03	O形圈 "O"Ring	0.04 kg	01-DHD1120-03	11	挡圈 Check Ring	0.25 Kg	01-DHD1120-11
04	逆止阀 Check Valve	1.5 kg	01-DHD1120-04	12	卡环 Retainer Ring	5.2 Kg	01-DHD1120-12
05	弹簧 Spring	0.2 kg	01-DHD1120-05	13	O形圈 "O"Ring	0.04 Kg	01-DHD1120-13
06	配气座 Valve Seatt	21 kg	01-DHD1120-06	14	垫片 Adjuster Shim	1.2 Kg	01-DHD1120-14
07	内缸 Inner Cylinder	29 kg	01-DHD1120-07	15	卡钎套 Drive Chuckk	53.5 Kg	01-DHD1120-15
08	活塞 Piston	119 kg	01-DHD1120-08	16	钻头 Drill Bit		01-DHD1120-16

技术参数 / Technical Parameters

总长（不含钻头）Length(Less bit)	总重 Weight	冲击器外径 Outer Diameter	接头螺纹 Connection Thread	钻头钎柄 Bit Shank	钻孔范围 Hole Range
1845mm	598Kg	¢275mm	API6 5/8"REG	DHD1120	¢295-¢400mm

适用气压 Work Pressure	推荐转速 Recommended rotation speed	耗风量/Air Consumption	
		1.8Mpa	2.4Mpa
1.5-3.3 Mpa	25～50 r/min	50m³/min	70m³/min

N125

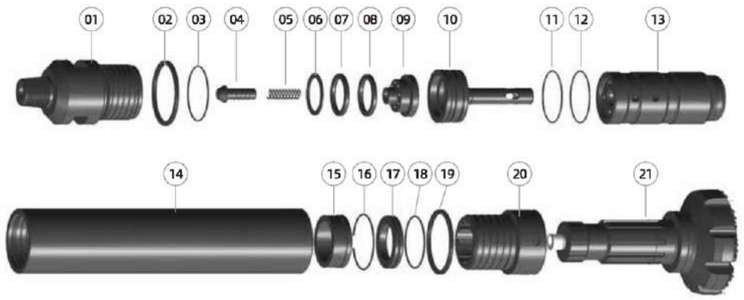

Ref.	部件 Parts	单重 Weight	件号 Part No.	Ref.	部件 Parts	单重 Weight	件号 Part No.
01	接头 Top Sub	163.5 Kg	01-N125-01	12	O形圈 "O"Ring	0.03 Kg	01-N125-12
02	垫圈 Adjuster Shim	1.5 Kg	01-N125-02	13	活塞 Piston	154 Kg	01-N125-13
03	O形圈 "O"Ring	0.03 Kg	01-N125-03	14	外缸 Piston Case	246.5Kg	01-N125-14
04	逆止阀 Check Valve	1.5 Kg	01-N125-04	15	衬套 Guided Sleeve	12.7 Kg	01-N125-15
05	弹簧 Spring	0.2 Kg	01-N125-05	16	挡圈 Check Ring	0.2 Kg	01-N125-16
06	垫片 Adjuster Shim	0.7 Kg	01-N125-06	17	卡环 Retainer Ring	7 Kg	01-N125-17
07	橡胶垫 Rubber Buffer	0.3 Kg	01-N125-07	18	O形圈 "O"Ring	0.3 Kg	01-N125-18
08	橡胶垫 Rubber Buffer	0.3 Kg	01-N125-08	19	垫圈 Adjuster Shim	1.5 Kg	01-N125-19
09	配气座 Valve Seatt	11.8 Kg	01-N125-09	20	卡钎套 Driver Chuck	68.5 Kg	01-N125-20
10	配气杆 Rigid Valve	27.4 Kg	01-N125-10	21	钻头 Drill Bit		01-N125-21
11	O形圈 "O"Ring	0.03 Kg	01-N125-11				

技术参数 / Technical Parameters

总长（不含钻头）Length(Less bit)	总重 Weight	冲击器外径 Outer Diameter	接头螺纹 Connection Thread	钻头钎柄 Bit Shank	钻孔范围 Hole Range
1785mm	698Kg	¢305mm	API6 5/8"REG	NUMA125	¢330-¢400mm

适用气压 Work Pressure	推荐转速 Recommended rotation speed	耗风量/Air Consumption	
		1.8Mpa	2.4Mpa
1.5-3.3 Mpa	25～45 r/min	46m³/min	58m³/min

YC410

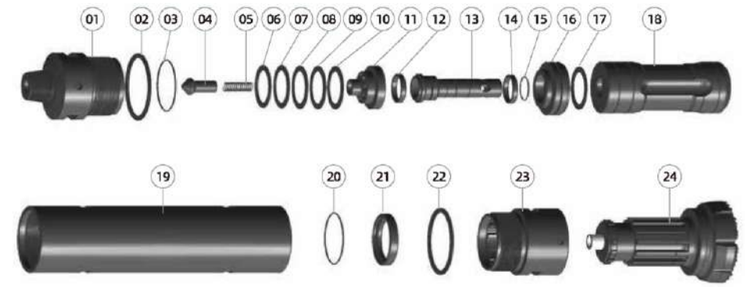

Ref.	部件 Parts	单重 Weight	件号 Part No.	Ref.	部件 Parts	单重 Weight	件号 Part No.
01	接头 Top Sub	274 Kg	01-YC410-01	13	配气杆 Rigid Valve	0.3 Kg	01-YC410-13
02	垫片 Adjuster Shim	2.9 Kg	01-YC410-02	14	橡胶垫 Rubber Buffer	0.3 Kg	01-YC410-14
03	O形圈 "O"Ring	0.03 Kg	01-YC410-03	15	O形圈 "O"Ring	0.03 Kg	01-YC410-15
04	逆止阀 Check Valve	3.4 Kg	01-YC410-04	16	杆座 Pole seat	50 Kg	01-YC410-16
05	弹簧 Spring	0.3 Kg	01-YC410-05	17	O形圈 "O"Ring	0.03 Kg	01-YC410-17
06	调整圈 Adjuster Ring	1.5 Kg	01-YC410-06	18	活塞 Piston	347 Kg	01-YC410-18
07	碟簧 Disc Spring	1.35 Kg	01-YC410-07	19	外缸 Piston Case	562 Kg	01-YC410-19
08	碟簧 Disc Sping	1.35 Kg	01-YC410-08	20	挡圈 Check Ring	0.3 Kg	01-YC410-20
09	碟簧 Disc Sping	1.35 Kg	01-YC410-09	21	卡环 Retainer Ring	10 Kg	01-YC410-21
10	碟簧 Disc Sping	1.35 Kg	01-YC410-10	22	垫片 Adjuster Shim	2.9 Kg	01-YC410-22
11	配气座 Valve Seat	26.4 Kg	01-YC410-11	23	卡钎套 Driver Chuck	155 Kg	01-YC410-23
12	橡胶垫 Rubber Buffer	0.3 Kg	01-YC410-12	24	钻头 Drill Bit		01-YC410-24

技术参数 / Technical Parameters

总长（不含钻头）Length(Less bit)	总重 Weight	冲击器外径 Outer Diameter	接头螺纹 Connection Thread	钻头钎柄 Bit Shank	钻孔范围 Hole Range
2162mm	1464Kg	¢406mm	API8 5/8"REG	Numa180	¢450-¢600mm

适用气压 Work Pressure	推荐转速 Recommended rotation speed	耗风量/Air Consumption	
		1.8Mpa	2.4Mpa
1.5-3.5 Mpa	20~40 r/min	63m³/min	85m³/min

QL40

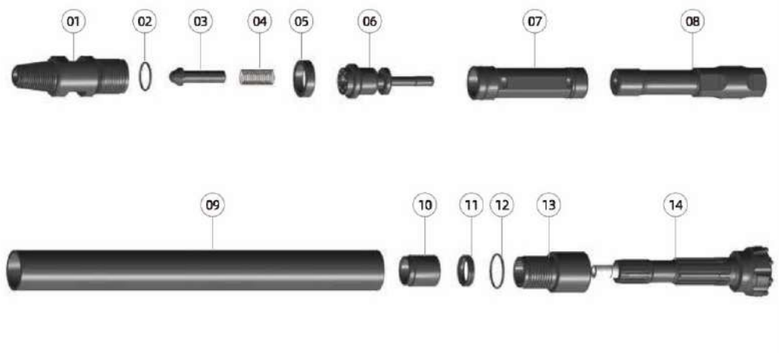

Ref.	部件 Parts	单重 Weight	件号 Part No.	Ref.	部件 Parts	单重 Weight	件号 Part No.
01	接头 Top Sub	8.8 Kg	01-QL40-01	09	外缸 Piston Case	16.5 Kg	01-QL40-09
02	O形圈 "O"Ring	0.01 Kg	01-QL40-02	10	衬套 Guided Sleeve	0.9 Kg	01-QL40-10
03	逆止阀 Check Valve	0.46 Kg	01-QL40-03	11	卡环 Retainer Ring	0.2 Kg	01-QL40-11
04	弹簧 Spring	0.04 Kg	01-QL40-04	12	O形圈 "O"Ring	0.01 Kg	01-QL40-12
05	橡胶垫 Rubber Buffer	0.2 Kg	01-QL40-05	13	卡钎套 Drive Chuck	3.3 Kg	01-QL40-13
06	配气座 Valve Seat	2.1 Kg	01-QL40-06	14	钻头 Drill Bit		01-QL40-14
07	内缸 Inner Cylinder	2.45 Kg	01-QL40-07				
08	活塞 Piston	8.8 Kg	01-QL40-08				

技术参数 / Technical Parameters

总长（不含钻头）Length(Less bit)	总重 Weight	冲击器外径 Outer Diameter	接头螺纹 Connection Thread	钻头钎柄 Bit Shank	钻孔范围 Hole Range
1102mm	43.7Kg	¢99mm	API2 3/8"REG	QL40	¢110-¢135mm

适用气压 Work Pressure	推荐转速 Recommended rotation speed	耗风量/Air Consumption	
		1.0Mpa	1.8Mpa
1.0-2.2 Mpa	30-60 r/min	5.5m³/min	10m³/min

QL50

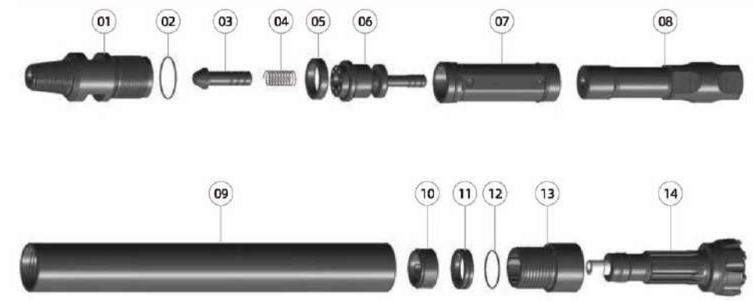

Ref.	部件 Parts	单重 Weight	件号 Part No.	Ref.	部件 Parts	单重 Weight	件号 Part No.
01	接头 Top Sub	14.7 Kg	01-QL50-01	09	外缸 Piston Case	24.7 Kg	01-QL50-09
02	O形圈 "O"Ring	0.02 Kg	01-QL50-02	10	衬套 Guided Sleeve	1 Kg	01-QL50-10
03	逆止阀 Check Valve	1 Kg	01-QL50-03	11	卡环 Retainer Ring	0.6 Kg	01-QL50-11
04	弹簧 Spring	0.06 Kg	01-QL50-04	12	O形圈 "O"Ring	0.01 Kg	01-QL50-12
05	橡胶垫 Rubber Buffer	0.2 Kg	01-QL50-05	13	卡钎套 Drive Chuck	5.6 Kg	01-QL50-13
06	配气座 Valve Seat	4.1 Kg	01-QL50-06	14	钻头 Drill Bit		01-QL50-14
07	内缸 Inner Cylinder	4.4 Kg	01-QL50-07				
08	活塞 Piston	17 Kg	01-QL50-08				

技术参数 / Technical Parameters

总长（不含钻头）Length(Less bit)	总重 Weight	冲击器外径 Outer Diameter	接头螺纹 Connection Thread	钻头钎柄 Bit Shank	钻孔范围 Hole Range
1154mm	73.5Kg	¢126mm	API2 3/8"REG	QL50	¢135-¢155mm

适用气压 Work Pressure	推荐转速 Recommended rotation speed	耗风量/Air Consumption	
		1.0Mpa	1.8Mpa
1.0-2.5 Mpa	30-60 r/min	9m³/min	15m³/min

QL60

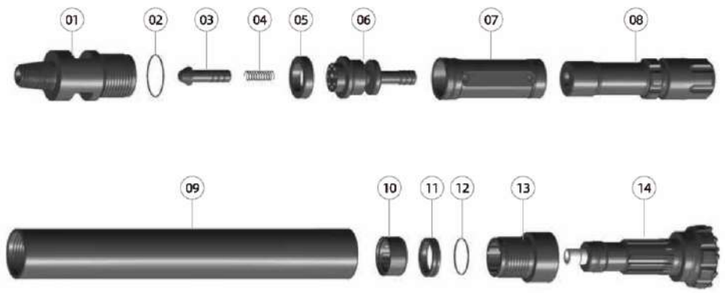

Ref.	部件 Parts	单重 Weight	件号 Part No.	Ref.	部件 Parts	单重 Weight	件号 Part No.
01	接头 Top Sub	23 Kg	01-QL60-01	09	外缸 Piston Case	39 Kg	01-QL60-09
02	O形圈 "O"Ring	0.02 Kg	01-QL60-02	10	衬套 Guided Sleeve	1.1 Kg	01-QL60-10
03	逆止阀 Check Valve	0.08 Kg	01-QL60-03	11	卡环 Retainer Ring	0.6 Kg	01-QL60-11
04	弹簧 Spring	0.05 Kg	01-QL60-04	12	O形圈 "O"Ring	0.02 Kg	01-QL60-12
05	橡胶垫 Rubber Buffer	0.3 Kg	01-QL60-05	13	卡钎套 Drive Chuckk	6.3 Kg	01-QL60-13
06	配气座 Valve Seat	6.2 Kg	01-QL60-06	14	钻头 Drill Bit		01-QL60-14
07	内缸 Inner Cylinder	5 Kg	01-QL60-07				
08	活塞 Piston	23.5 Kg	01-QL60-08				

技术参数 / Technical Parameters

总长（不含钻头）Length(Less bit)	总重 Weight	冲击器外径 Outer Diameter	接头螺纹 Connection Thread	钻头钎柄 Bit Shank	钻孔范围 Hole Range
1211mm	105Kg	¢148mm	API3 1/2"REG	QL60	¢158- ¢190mm

适用气压 Work Pressure	推荐转速 Recommended rotation speed	耗风量/Air Consumption	
		1.0Mpa	1.8Mpa
1.0-2.5 Mpa	30-60 r/min	20m³/min	28m³/min

QL80

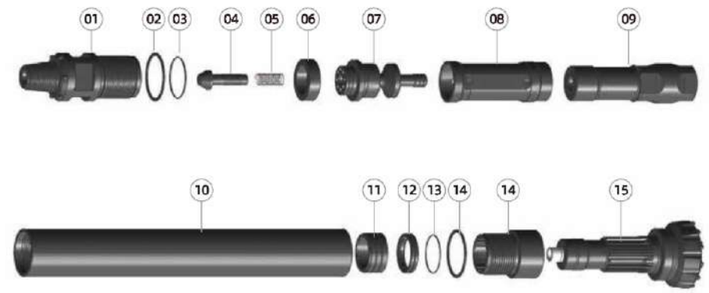

Ref.	部件 Parts	单重 Weight	件号 Part No.	Ref.	部件 Parts	单重 Weight	件号 Part No.
01	接头 Top Sub	42 Kg	01-QL80-01	09	活塞 Piston	41 Kg	01-QL80-09
02	垫片 Adjuster Shim	0.2 Kg	01-QL80-02	10	外缸 Piston Case	64 Kg	01-QL80-10
03	O形圈 "O"Ring	0.02 Kg	01-QL80-03	11	衬套 Guided Sleeve	2.9 Kg	01-QL80-11
04	逆止阀 Check Valve	1.3 Kg	01-QL80-04	12	卡环 Retainer Ring	1.2 Kg	01-QL80-12
05	弹簧 Spring	0.1 Kg	01-QL80-05	13	O形圈 "O"Ring	0.02 Kg	01-QL80-13
06	橡胶垫 Rubber Buffer	0.4 Kg	01-QL80-06	14	垫片 Adjuster Shim	0.2 Kg	01-QL80-14
07	配气座 Valve Seat	12.7 Kg	01-QL80-07	15	卡钎套 Drive Chuckk	12 Kg	01-QL80-15
08	内缸 Inner Cylinder	9.1 Kg	01-QL80-08	16	钻头 Drill Bit		01-QL80-16

技术参数 / Technical Parameters

总长（不含钻头）Length(Less bit)	总重 Weight	冲击器外径 Outer Diameter	接头螺纹 Connection Thread	钻头钎柄 Bit Shank	钻孔范围 Hole Range
1471mm	187Kg	¢180mm	API4 1/2"REG	QL80	¢195- ¢254mm

适用气压 Work Pressure	推荐转速 Recommended rotation speed	耗风量/Air Consumption	
		1.8Mpa	2.4Mpa
1.5-3.3 Mpa	30-60 r/min	26m³/min	34m³/min

MISSION / SD Shank DTH Hammer

Mission/SD series

Our MISSION/SD series DTH hammers are designed and manufactured with advanced technology and strict quality control. Simple structure, high reliability, easy maintenance and excellent performance make the hammers ideal for various drilling conditions.

Industrial and Engineering Technology Co., Limited DTH hammers are manufactured from high quality alloy steel and precision machined parts. All key components are heat treated to ensure high durability and long service life. We are committed to providing our customers with stable, efficient and cost-effective drilling solutions.

M30

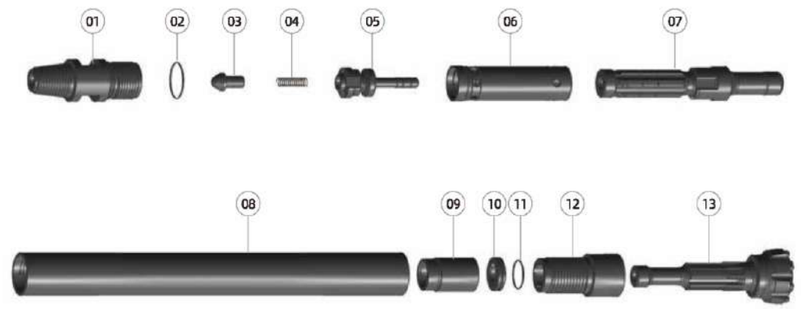

Ref.	部件 Parts	单重 Weight	件号 Part No.	Ref.	部件 Parts	单重 Weight	件号 Part No.
01	接头 Top Sub	4.5 Kg	01-Mis30-01	09	衬套 Guided Sleeve	0.9 Kg	01-Mis30-09
02	O形圈 "O"Ring	0.01 Kg	01-Mis30-02	10	卡环 Retainer Ring	0.2 kg	01-Mis30-10
03	逆止阀 Check Valve	0.13 Kg	01-Mis30-03	11	O形圈 "O"Ring	0.01 Kg	01-Mis30-11
04	弹簧 Spring	0.02 Kg	01-Mis30-04	12	卡钎套 Drive Chuckk	2.5 kg	01-Mis30-12
05	配气座 Valve Seat	0.76 Kg	01-Mis30-05	13	钻头 Drill Bit		01-Mis30-13
06	内缸 Inner Cylinder	1.45 Kg	01-Mis30-06				
07	活塞 Piston	4.8 Kg	01-Mis30-07				
08	外缸 Piston Case	7.6 Kg	01-Mis30-08				

技术参数 / Technical Parameters

总长（不含钻头）Length(Less bit)	总重 Weight	冲击器外径 Outer Diameter	接头螺纹 Connection Thread	钻头钎柄 Bit Shank	钻孔范围 Hole Range
931mm	23Kg	¢82mm	API2 3/8"REG	M30	¢90-¢115mm

适用气压 Work Pressure	推荐转速 Recommended rotation speed	耗风量/Air Consumption	
		1.0Mpa	1.5Mpa
1.0-1.7 Mpa	30-50 r/min	$4m^3$/min	$6.5m^3$/min

M40

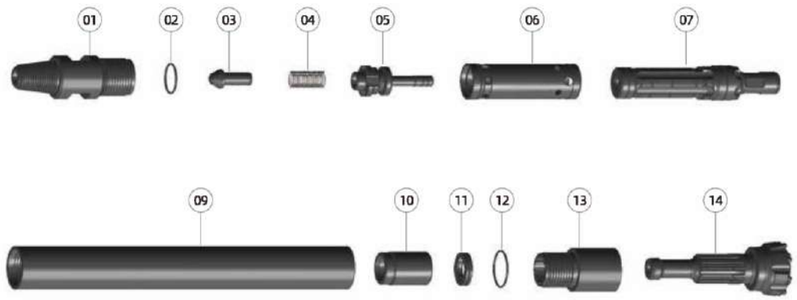

Ref.	部件 Parts	单重 Weight	件号 Part No.	Ref.	部件 Parts	单重 Weight	件号 Part No.
01	接头 Top Sub	8.1 Kg	01-Mis40-01	09	衬套 Guided Sleeve	1.84 Kg	01-Mis40-09
02	O形圈 "O"Ring	0.01 Kg	01-Mis40-02	10	卡环 Retainer Ring	0.3 Kg	01-Mis40-10
03	逆止阀 Check Valve	0.3 Kg	01-Mis40-03	11	O形圈 "O"Ring	0.01 Kg	01-Mis40-11
04	弹簧 Spring	0.04 Kg	01-Mis40-04	12	卡钎套 Drive Chuckk	3.9 Kg	01-Mis40-12
05	配气座 Valve Seat	1.5 Kg	01-Mis40-05	13	钻头 Drill Bit		01-Mis40-13
06	内缸 Inner Cylinder	2.1 Kg	01-Mis40-06				
07	活塞 Piston	8.4 Kg	01-Mis40-07				
08	外缸 Piston Case	15 Kg	01-Mis40-08				

技术参数 / Technical Parameters

总长（不含钻头）Length(Less bit)	总重 Weight	冲击器外径 Outer Diameter	接头螺纹 Connection Thread	钻头钎柄 Bit Shank	钻孔范围 Hole Range
1004mm	40.5Kg	¢99mm	API2 3/8"REG	M40	¢110-¢135mm

适用气压 Work Pressure	推荐转速 Recommended rotation speed	耗风量/Air Consumption	
1.0-2.2 Mpa	30-60 r/min	5m³/min	9m³/min

NM5C

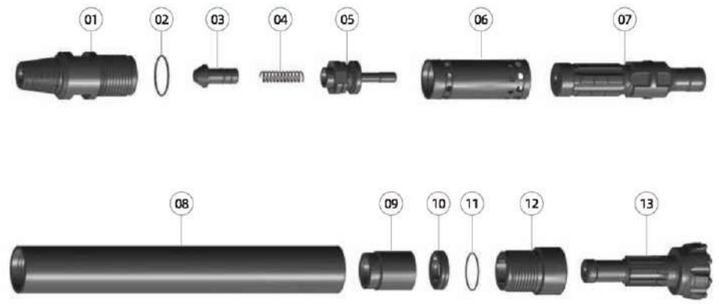

Ref.	部件 Parts	单重 Weight	件号 Part No.	Ref.	部件 Parts	单重 Weight	件号 Part No.
01	接头 Top Sub	12.7 Kg	01-NM5C-01	09	衬套 Guided Sleeve	3 Kg	01-NM5C-09
02	O形圈 "O"Ring	0.01 Kg	01-NM5C-02	10	卡环 Retainer Ring	0.7 Kg	01-NM5C-10
03	逆止阀 Check Valve	0.6 Kg	01-NM5C-03	11	O形圈 "O"Ring	0.01 Kg	01-NM5C-11
04	弹簧 Spring	0.06 Kg	01-NM5C-04	12	卡钎套 Drive Chuckk	5.3 Kg	01-NM5C-12
05	配气座 Valve Seat	1.7 Kg	01-NM5C-05	13	钻头 Drill Bit		01-NM5C-13
06	内缸 Inner Cylinder	2.9 Kg	01-NM5C-06				
07	活塞 Piston	12 Kg	01-NM5C-07				
08	外缸 Piston Case	23 Kg	01-NM5C-08				

技术参数 / Technical Parameters

总长（不含钻头）Length(Less bit)	总重 Weight	冲击器外径 Outer Diameter	接头螺纹 Connection Thread	钻头钎柄 Bit Shank	钻孔范围 Hole Range
1080mm	62Kg	¢114mm	API2 3/8"REG	NM5C	¢125-¢146mm

适用气压 Work Pressure	推荐转速 Recommended rotation speed	耗风量/Air Consumption	
		1.0Mpa	1.8Mpa
1.0-2.5 Mpa	30-60 r/min	6m³/min	12m³/min

M50

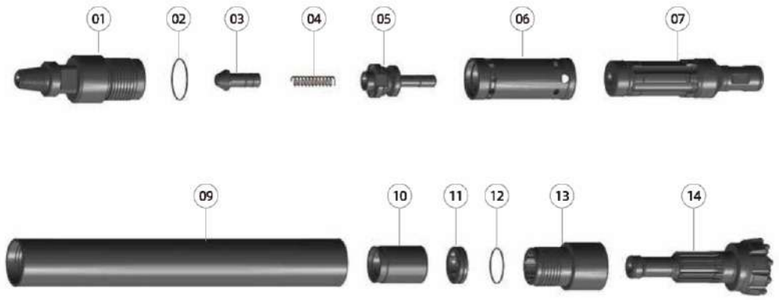

Ref.	部件 Parts	单重 Weight	件号 Part No.	Ref.	部件 Parts	单重 Weight	件号 Part No.
01	接头 Top Sub	13.7 Kg	01-Mis50-01	09	衬套 Guided Sleeve	2.6 Kg	01-Mis50-09
02	O形圈 "O"Ring	0.02 Kg	01-Mis50-02	10	卡环 Retainer Ring	0.7 Kg	01-Mis50-10
03	逆止阀 Check Valve	0.7 Kg	01-Mis50-03	11	O形圈 "O"Ring	0.01 Kg	01-Mis50-11
04	弹簧 Spring	0.1 Kg	01-Mis50-04	12	卡钎套 Drive Chuckk	7.1 Kg	01-Mis50-12
05	配气座 Valve Seat	2 Kg	01-Mis50-05	13	钻头 Drill Bit		01-Mis50-13
06	内缸 Inner Cylinder	2.8 Kg	01-Mis50-06				
07	活塞 Piston	15 Kg	01-Mis50-07				
08	外缸 Piston Case	24 Kg	01-Mis50-08				

技术参数 / Technical Parameters

总长（不含钻头）Length(Less bit)	总重 Weight	冲击器外径 Outer Diameter	接头螺纹 Connection Thread	钻头钎柄 Bit Shank	钻孔范围 Hole Range
1122mm	70.5Kg	¢126mm	API2 3/8"REG	M50	¢136-¢155mm

适用气压 Work Pressure	推荐转速 Recommended rotation speed	耗风量/Air Consumption	
		1.0Mpa	1.8Mpa
1.0-2.5 Mpa	30-60 r/min	7m³/min	13m³/min

M60

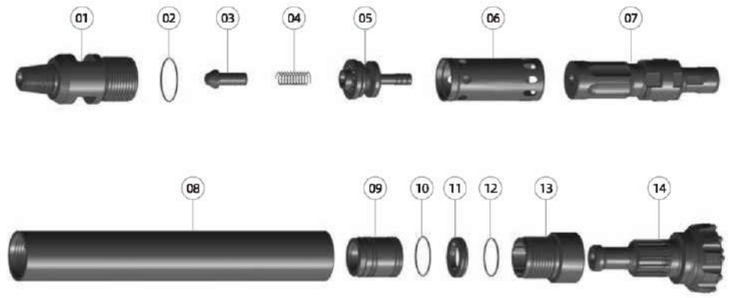

Ref.	部件 Parts	单重 Weight	件号 Part No.	Ref.	部件 Parts	单重 Weight	件号 Part No.
01	接头 Top Sub	20 kg	01-Mis60-01	09	衬套 Guided Sleeve	4.8 kg	01-Mis60-09
02	O形圈 "O"Ring	0.01 Kg	01-Mis60-02	10	O形圈 "O"Ring	0.01 Kg	01-Mis60-10
03	逆止阀 Check Valve	0.56 Kg	01-Mis60-03	11	卡环 Retainer Ring	0.9 kg	01-Mis60-11
04	弹簧 Spring	0.06 Kg	01-Mis60-04	12	O形圈 "O"Ring	0.01 Kg	01-Mis60-12
05	配气座 Valve Seat	3.5 kg	01-Mis60-05	13	卡钎套 Drive Chuckk	5.8 kg	01-Mis60-13
06	内缸 Inner Cylinder	3.9 kg	01-Mis60-06	14	钻头 Drill Bit		01-Mis60-14
07	活塞 Piston	21.5 kg	01-Mis60-07				
08	外缸 Piston Case	30.5 kg	01-Mis60-08				

技术参数 / Technical Parameters

总长（不含钻头）Length(Less bit)	总重 Weight	冲击器外径 Outer Diameter	接头螺纹 Connection Thread	钻头钎柄 Bit Shank	钻孔范围 Hole Range
1129mm	91.5Kg	¢144mm	API3 1/2"REG	M60	¢152-¢203mm

适用气压 Work Pressure	推荐转速 Recommended rotation speed	耗风量/Air Consumption	
		1.0Mpa	1.8Mpa
1.0-2.8 Mpa	30-60 r/min	18m³/min	25m³/min

M80

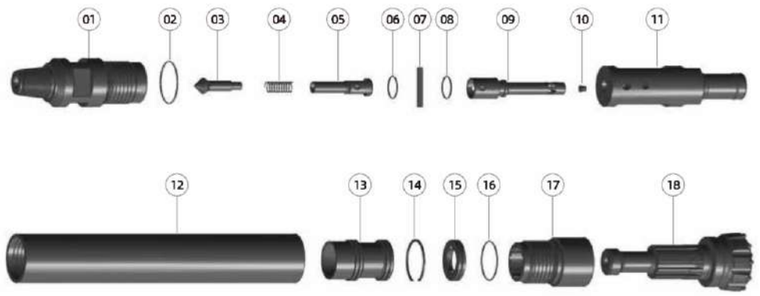

Ref.	部件 Parts	单重 Weight	件号 Part No.	Ref.	部件 Parts	单重 Weight	件号 Part No.
01	接头 Top Sub	43 Kg	01-Mis80-01	10	尼龙塞 Nylon Plug	0.04 Kg	01-Mis80-10
02	O形圈 "O"Ring	0.01 Kg	01-Mis80-02	11	活塞 Piston	42 Kg	01-Mis80-11
03	逆止阀 Check Valve	0.46 Kg	01-Mis80-03	12	外缸 Piston Case	43 Kg	01-Mis80-12
04	弹簧 Spring	0.07 Kg	01-Mis80-04	13	衬套 Guided Sleeve	9.8 Kg	01-Mis80-13
05	阀座 Valve Seatt	0.65 Kg	01-Mis80-05	14	挡圈 Check Ring	0.09 Kg	01-Mis80-14
06	O形圈 "O"Ring	0.01 Kg	01-Mis80-06	15	卡环 Retainer Ring	1.9 Kg	01-Mis80-15
07	插销 Lock Pin	0.3 Kg	01-Mis80-07	16	O形圈 "O"Ring	0.01 Kg	01-Mis80-16
08	O形圈 "O"Ring	0.01 Kg	01-Mis80-08	17	卡钎套 Drive Chuckk	17 Kg	01-Mis80-17
09	配气杆 Rigid Valve	2 Kg	01-Mis80-09	18	钻头 Drill Bit		01-Mis80-18

技术参数 / Technical Parameters

总长（不含钻头）Length(Less bit)	总重 Weight	冲击器外径 Outer Diameter	接头螺纹 Connection Thread	钻头钎柄 Bit Shank	钻孔范围 Hole Range
1333mm	160.5Kg	¢180mm	API4 1/2"REG	M80	¢195-¢245mm

适用气压 Work Pressure	推荐转速 Recommended rotation speed	耗风量/Air Consumption	
		1.8Mpa	2.4Mpa
1.5-3.3 Mpa	30～60 r/min	26m³/min	35m³/min

SD4

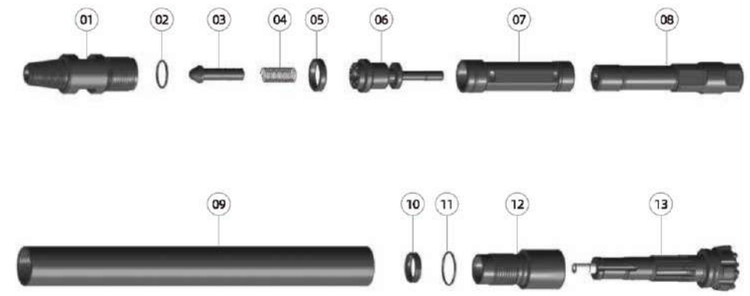

Ref.	部件 Parts	单重 Weight	件号 Part No.	Ref.	部件 Parts	单重 Weight	件号 Part No.
01	01 接头 Top Sub	8.8 Kg	01-SD4-01	09	外缸 Piston Case	15.6 Kg	01-SD4-09
02	O形圈 "O"Ring	0.01 Kg	01-SD4-02	10	卡环 Retainer Ring	0.2 Kg	01-SD4-10
03	逆止阀 Check Valve	0.46 Kg	01-SD4-03	11	O形圈 "O"Ring	0.01 Kg	01-SD4-11
04	弹簧 Spring	0.04 Kg	01-SD4-04	12	卡钎套 Drive Chuckk	4 Kg	01-SD4-12
05	橡胶垫 Rubber Buffer	0.2 Kg	01-SD4-05	13	钻头 Drill Bit		01-SD4-13
06	配气座 Valve Seat	2.1 Kg	01-SD4-06				
07	内缸 Inner Cylinder	2.45 Kg	01-SD4-07				
08	活塞 Piston	9 Kg	01-SD4-08				

技术参数 / Technical Parameters

总长（不含钻头）Length(Less bit)	总重 Weight	冲击器外径 Outer Diameter	接头螺纹 Connection Thread	钻头钎柄 Bit Shank	钻孔范围 Hole Range
1082mm	43Kg	¢99mm	API2 3/8"REG	SD4	¢110-¢135mm

适用气压 Work Pressure	推荐转速 Recommended rotation speed	耗风量/Air Consumption	
		1.8Mpa	2.4Mpa
1.0-2.2 Mpa	30-60 r/min	5.5m³/min	10m³/min

SD5

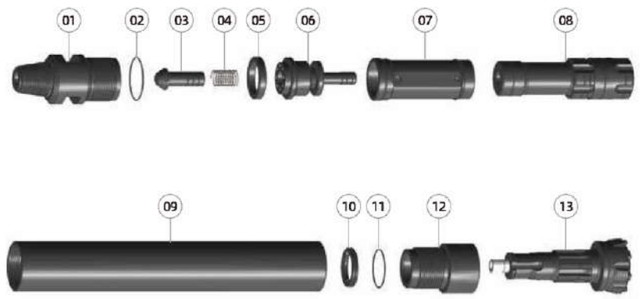

Ref.	部件 Parts	单重 Weight	件号 Part No.	Ref.	部件 Parts	单重 Weight	件号 Part No.
01	接头 Top Sub	14.7 Kg	01-SD5-01	09	外缸 Piston Case	23.5 Kg	01-SD5-09
02	O形圈 "O"Ring	0.02 Kg	01-SD5-02	10	卡环 Retainer Ring	0.5 Kg	01-SD5-10
03	逆止阀 Check Valve	1 Kg	01-SD5-03	11	O形圈 "O"Ring	0.01 Kg	01-SD5-11
04	弹簧 Spring	0.06 Kg	01-SD5-04	12	卡钎套 Drive Chuck	7.8 Kg	01-SD5-12
05	橡胶垫 Rubber Buffer	0.2 Kg	01-SD5-05	13	钻头 Drill Bit		01-SD5-13
06	配气座 Valve Seat	4.1 Kg	01-SD5-06				
07	内缸 Inner Cylinder	4.4 Kg	01-SD5-07				
08	活塞 Piston	17.3 Kg	01-SD5-08				

技术参数 / Technical Parameters

总长（不含钻头）Length(Less bit)	总重 Weight	冲击器外径 Outer Diameter	接头螺纹 Connection Thread	钻头钎柄 Bit Shank	钻孔范围 Hole Range
1178mm	73.6Kg	¢125mm	API2 3/8"REG	SD5	¢135- ¢155mm

适用气压 Work Pressure	推荐转速 Recommended rotation speed	耗风量/Air Consumption	
		1.8Mpa	2.4Mpa
1.0-2.5 Mpa	30-60 r/min	$9m^3$/min	$15m^3$/min

SD6

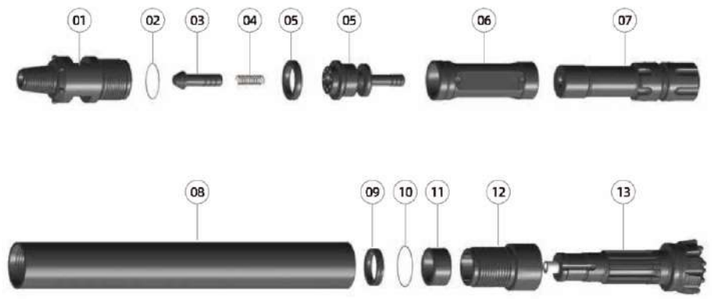

Ref.	部件 Parts	单重 Weight	件号 Part No.	Ref.	部件 Parts	单重 Weight	件号 Part No.
01	接头 Top Sub	20.3 Kg	01-SD6-01	09	外缸 Piston Case	34.5 Kg	01-SD6-09
02	O形圈 "O"Ring	0.02 Kg	01-SD6-02	10	卡环 Retainer Ring	0.5 Kg	01-SD6-10
03	逆止阀 Check Valve	0.8 Kg	01-SD6-03	11	O形圈 "O"Ring	0.01 Kg	01-SD6-11
04	弹簧 Spring	0.05 Kg	01-SD6-04	12	衬套 Guided Sleeve	1.6 Kg	01-SD6-12
05	橡胶垫 Rubber Buffer	0.3 Kg	01-SD6-05	13	卡钎套 Drive Chuckk	8 Kg	01-SD6-13
06	配气座 Valve Seat	5 Kg	01-SD6-06	14	钻头 Drill Bit		01-SD6-14
07	内缸 Inner Cylinder	4 Kg	01-SD6-07				
08	活塞 Piston	23.5 Kg	01-SD6-08				

技术参数 / Technical Parameters

总长（不含钻头）Length(Less bit)	总重 Weight	冲击器外径 Outer Diameter	接头螺纹 Connection Thread	钻头钎柄 Bit Shank	钻孔范围 Hole Range
1277mm	99Kg	¢142mm	API3 1/2"REG	SD6	¢150- ¢190mm

适用气压 Work Pressure	推荐转速 Recommended rotation speed	耗风量/Air Consumption	
		1.8Mpa	2.4Mpa
1.0-2.5 Mpa	30-60 r/min	$20m^3$/min	$28m^3$/min

SD8

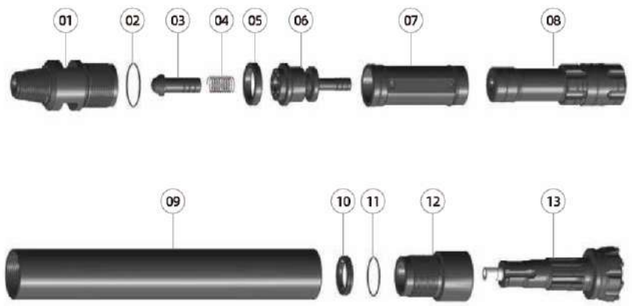

SD

Ref.	部件 Parts	单重 Weight	件号 Part No.	Ref.	部件 Parts	单重 Weight	件号 Part No.
01	接头 Top Sub	42 Kg	01-SD8-01	09	活塞 Piston	43.5 Kg	01-SD8-09
02	垫片 Adjuster Shim	0.2 Kg	01-SD8-02	10	外缸 Piston Case	64.5 Kg	01-SD8-10
03	O形圈 "O"Ring	0.02 Kg	01-SD8-03	11	卡环 Retainer Ring	1.25 Kg	01-SD8-11
04	逆止阀 Check Valve	1.3 Kg	01-SD8-04	12	O形圈 "O"Ring	0.02 Kg	01-SD8-12
05	弹簧 Spring	0.09 Kg	01-SD8-05	13	衬套 Guided Sleeve	3.35 Kg	01-SD8-13
06	橡胶垫 Rubber Buffer	0.4 Kg	01-SD8-06	14	卡钎套 Drive Chuckk	16 Kg	01-SD8-14
07	配气座 Valve Seat	12.7 Kg	01-SD8-07	15	钻头 Drill Bit		01-SD8-15
08	内缸 Inner Cylinder	9.1 Kg	01-SD8-08				

技术参数 / Technical Parameters

总长（不含钻头）Length(Less bit)	总重 Weight	冲击器外径 Outer Diameter	接头螺纹 Connection Thread	钻头钎柄 Bit Shank	钻孔范围 Hole Range
1463mm	194Kg	¢180mm	API4 1/2"REG	SD8	¢195-¢254mm

适用气压 Work Pressure	推荐转速 Recommended rotation speed	耗风量/Air Consumption	
		1.8Mpa	2.4Mpa
1.5-3.3 Mpa	30-60 r/min	26m³/min	34m³/min

SD10

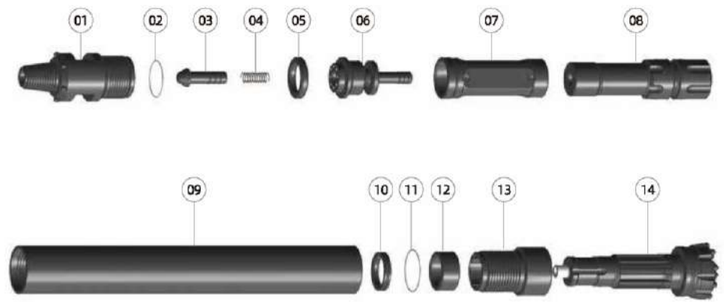

Ref.	部件 Parts	单重 Weight	件号 Part No.	Ref.	部件 Parts	单重 Weight	件号 Part No.
01	接头 Top Sub	60 kg	01-SD10-01	09	卡环 Retainer Ring	2.76 kg	01-SD10-09
02	O形圈 "O"Ring	0.03 kg	01-SD10-02	10	O形圈 "O"Ring	0.02 kg	01-SD10-10
03	逆止阀 Check Valve	1.5 kg	01-SD10-03	11	衬套 Guided Sleeve	5 kg	01-SD10-11
04	弹簧 Spring	0.2 kg	01-SD10-04	12	卡钎套 Drive Chuckk	21 kg	01-SD10-12
05	配气座 Valve Seat	12.8 kg	01-SD10-05	13	钻头 Drill Bit		01-SD10-13
06	内缸 Inner Cylinder	13.5 kg	01-SD10-06				
07	活塞 Piston	71 kg	01-SD10-07				
08	外缸 Piston Case	85 kg	01-SD10-08				

技术参数 / Technical Parameters

总长（不含钻头）Length(Less bit)	总重 Weight	冲击器外径 Outer Diameter	接头螺纹 Connection Thread	钻头钎柄 Bit Shank	钻孔范围 Hole Range
1413mm	273Kg	¢225mm	API5 1/2"REG	SD10	¢254-¢311mm

适用气压 Work Pressure	推荐转速 Recommended rotation speed	耗风量/Air Consumption	
		1.8Mpa	2.4Mpa
1.5-3.3 Mpa	25～50 r/min	40m³/min	60m³/min

SD12

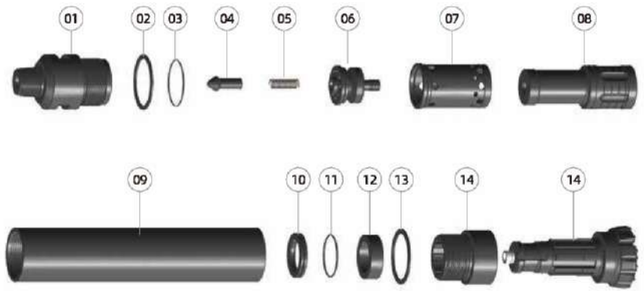

Ref.	部件 Parts	单重 Weight	件号 Part No.	Ref.	部件 Parts	单重 Weight	件号 Part No.
01	接头 Top Sub	134 kg	01-SD12-01	09	外缸 Piston Case	220 kg	01-SD12-09
02	垫片 Adjuster Shim	0.8 kg	01-SD12-02	10	卡环 Retainer Ring	5.2 kg	01-SD12-10
03	O形圈 "O"Ring	0.04 kg	01-SD12-03	11	O形圈 "O"Ring	0.03 kg	01-SD12-11
04	逆止阀 Check Valve	1.5 kg	01-SD12-04	12	衬套 Guided Sleeve	5.2 kg	01-SD12-12
05	弹簧 Spring	0.2 kg	01-SD12-05	13	垫片 Adjuster Shim	0.8 kg	01-SD12-13
06	配气座 Valve Seat	21 kg	01-SD12-06	14	卡钎套 Drive Chuckk	53.5 kg	01-SD12-14
07	内缸 Inner Cylinder	29 kg	01-SD12-07	15	钻头 Drill Bit		01-SD12-15
08	活塞 Piston	118 kg	01-SD12-08				

技术参数 / Technical Parameters

总长（不含钻头）Length(Less bit)	总重 Weight	冲击器外径 Outer Diameter	接头螺纹 Connection Thread	钻头钎柄 Bit Shank	钻孔范围 Hole Range
1825mm	589Kg	¢275mm	API6 5/8"REG	SD12	¢295-¢400mm

适用气压 Work Pressure	推荐转速 Recommended rotation speed	耗风量/Air Consumption	
		1.8Mpa	2.4Mpa
1.5-3.3 Mpa	25～50 r/min	50m³/min	70m³/min

TD40

Ref.	部件 Parts	单重 Weight	件号 Part No	Ref.	部件 Parts	单重 Weight	件号 Part No
01	接头 Top Sub	8.9 Kg	01-TD40-01	08	活塞 Piston	9 Kg	01-TD40-09
02	O形圈 "O"Ring	0.01 Kg	01-TD40-02	09	外缸 Piston Case	15.9 Kg	01-TD40-10
03	逆止阀 Check Valve	0.46 Kg	01-TD40-03	10	卡环 Retainer Ring	0.2 Kg	01-TD40-11
04	弹簧 Spring	0.04 Kg	01-TD40-04	11	O形圈 "O"Ring	0.01 Kg	01-TD40-12
05	橡胶垫 Rubber Buffer	0.2 Kg	01-TD40-05	12	卡钎套 Drive Chuckk	3.6 Kg	01-TD40-13
06	配气座 Valve Seat	2.1 Kg	01-TD40-06	13	钻头 Drill Bit		
07	内缸 Inner Cylinder	2.45 Kg	01-TD40-07				

技术参数 / Technical Parameters

总长（不含钻头）Length(Less bit)	总重 Weight	冲击器外径 Outer Diameter	接头螺纹 Connection Thread	钻头钎柄 Bit Shank	钻孔范围 Hole Range
1032mm	42.8Kg	¢99mm	API2 3/8"REG	TD40	¢110-¢135mm

适用气压 Work Pressure	推荐转速 Recommended rotation speed	耗风量/Air Consumption	
		1.0Mpa	1.8Mpa
1.0-2.2 Mpa	30-60 r/min	5.5m3/min	10m3/min

COP32

Ref.	部件 Parts	单重 Weight	件号 Part No	Ref.	部件 Parts	单重 Weight	件号 Part No
01	接头 Top Sub	4.5 Kg	01-COP32-01	08	外缸 Piston Case	9.6 Kg	01-COP32-09
02	O形圈 "O"Ring	0.01 Kg	01-COP32-02	09	衬套 Guided Sleeve	0.9 Kg	01-COP32-10
03	逆止阀 Check Valve	0.13 Kg	01-COP32-03	10	卡环 Retainer Ring	0.15 Kg	01-COP32-11
04	弹簧 Spring	0.02 Kg	01-COP32-04	11	O形圈 "O"Ring	0.01 Kg	01-COP32-12
05	配气座 Valve Seat	0.76 Kg	01-COP32-05	12	卡钎套 Drive Chuckk	1.9 Kg	01-COP32-13
06	内缸 Inner Cylinder	1.45 Kg	01-COP32-06	13	钻头 Drill Bit		
07	活塞 Piston	4.8 Kg	01-COP32-07				

技术参数 / Technical Parameters

总长（不含钻头）Length(Less bit)	总重 Weight	冲击器外径 Outer Diameter	接头螺纹 Connection Thread	钻头钎柄 Bit Shank	钻孔范围 Hole Range
921mm	25.5Kg	¢82mm	API2 3/8"REG	COP32	¢90-¢115mm

适用气压 Work Pressure	推荐转速 Recommended rotation speed	耗风量/Air Consumption	
		1.0Mpa	1.5Mpa
1.0-1.7 Mpa	30-50 r/min	4m3/min	6.5m3/min

Medium-Low DTH Hammer

The main features are as following:

- The pressure are between 0.7 MPa and 1.75 MPa.
- Valveless hammers.
- Simple structure, easy to assemble and to disassemble, long lifespan.
- Higher impulse and faster drilling rate.
- Lower air consumption and lower oil consumption. A hole can be drilled on the check valve to provide more efficient cuttings discharge.
- Especially suitable for quarrying.

BR1

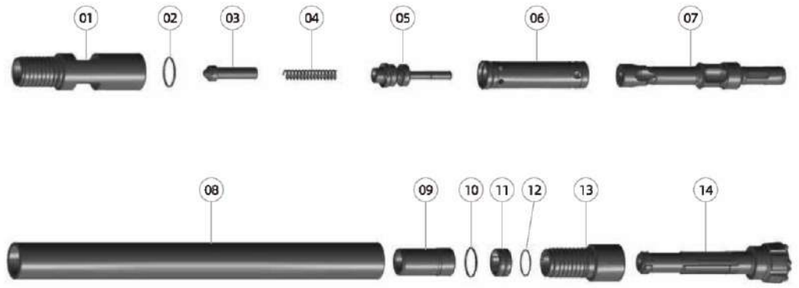

Ref.	部件 Parts	单重 Weight	件号 Part No.	Ref.	部件 Parts	单重 Weight	件号 Part No.
01	接头 Top Sub	1.92 kg	03-BR1-01	09	衬套 Guided Sleeve	0.29 kg	03-BR1-09
02	O形圈 "O"Ring	0.01 Kg	03-BR1-02	10	挡圈 Check Ring	0.1 kg	03-BR1-10
03	逆止阀 Check Valve	0.08 kg	03-BR1-03	11	卡环 Retainer Ring	0.08 kg	03-BR1-11
04	弹簧 Spring	0.01 Kg	03-BR1-04	12	O形圈 "O"Ring	0.01 Kg	03-BR1-12
05	配气座 Valve Seat	0.46 kg	03-BR1-05	13	卡钎套 Drive Chuckk	0.82 kg	03-BR1-13
06	内缸 Inner Cylinder	0.38 kg	03-BR1-06	14	钻头 Drill Bit		03-BR1-14
07	活塞 Piston	1.16 kg	03-BR1-07				
08	外缸 Piston Case	3.46 kg	03-BR1-08				

技术参数 / Technical Parameters

总长（不含钻头）Length(Less bit)	总重 Weight	冲击器外径 Outer Diameter	接头螺纹 Connection Thread	钻头钎柄 Bit Shank	钻孔范围 Hole Range
698mm	8.8Kg	¢56mm	RD40 BOX	BR1	¢64- ¢76mm

适用气压 Working Pressure	推荐转速 Recommended rotation speed	耗风量/Air Consumption	
		1.0MPa	1.4MPa
0.8-1.5 MPa	30-50 r/min	$2m^3$/min	$3m^3$/min

BR2

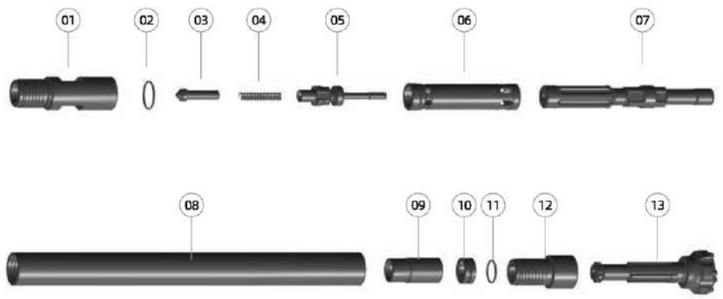

Ref.	部件 Parts	单重 Weight	件号 Part No.	Ref.	部件 Parts	单重 Weight	件号 Part No.
01	接头 Top Sub	2.5 Kg	03-BR2-01	09	衬套 Guided Sleeve	0.52 Kg	03-BR2-09
02	O形圈 "O"Ring	0.01 Kg	03-BR2-02	10	卡环 Retainer Ring	0.1 Kg	03-BR2-10
03	逆止阀 Check Valve	0.08 Kg	03-BR2-03	11	O形圈 "O"Ring	0.01 Kg	03-BR2-11
04	弹簧 Spring	0.05 Kg	03-BR2-04	12	卡钎套 Drive Chuckk	1.2 Kg	03-BR2-12
05	配气座 Valve Seat	0.5 Kg	03-BR2-05	13	钻头 Drill Bit		03-BR2-13
06	内缸 Inner Cylinder	0.6 Kg	03-BR2-06				
07	活塞 Piston	2.3 Kg	03-BR2-07				
08	外缸 Piston Case	4.5 Kg	03-BR2-08				

技术参数 / Technical Parameters

总长（不含钻头）Length(Less bit)	总重 Weight	冲击器外径 Outer Diameter	接头螺纹 Connection Thread	钻头钎柄 Bit Shank	钻孔范围 Hole Range
810mm	12.5Kg	¢64mm	RD50 BOX	BR2	¢70-¢90mm

适用气压 Work Pressure	推荐转速 Recommended rotation speed	耗风量/Air Consumption	
		1.0Mpa	1.4Mpa
0.8-1.5 Mpa	30-50 r/min	$3m^3$/min	$4.5m^3$/min

BR3

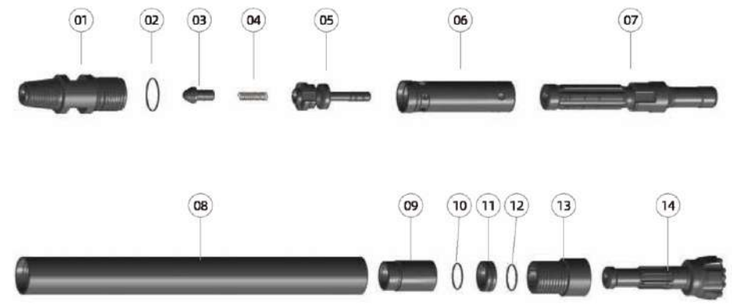

Ref.	部件 Parts	单重 Weight	件号 Part No.	Ref.	部件 Parts	单重 Weight	件号 Part No.
01	接头 Top Sub	4.4 Kg	01-BR3-01	09	衬套 Guided Sleeve	0.9 Kg	01-BR3-09
02	O形圈 "O"Ring	0.01 Kg	01-BR3-02	10	挡圈 Check Ring	0.15 Kg	01-BR3-10
03	逆止阀 Check Valve	0.13 Kg	01-BR3-03	11	卡环 Retainer Ring	0.25 Kg	01-BR3-11
04	弹簧 Spring	0.02 Kg	01-BR3-04	12	O形圈 "O"Ring	0.01 Kg	01-BR3-12
05	配气座 Valve Seat	0.76 Kg	01-BR3-05	13	卡钎套 Drive Chuckk	2 kg	01-BR3-13
06	内缸 Inner Cylinder	1.45 Kg	01-BR3-06	14	钻头 Drill Bit		01-BR3-14
07	活塞 Piston	4.7 Kg	01-BR3-07				
08	外缸 Piston Case	6 Kg	01-BR3-08				

技术参数 / Technical Parameters

总长（不含钻头）Length(Less bit)	总重 Weight	冲击器外径 Outer Diameter	接头螺纹 Connection Thread	钻头钎柄 Bit Shank	钻孔范围 Hole Range
871mm	21Kg	¢82mm	API2 3/8"REG	BR3	¢90-¢115mm

适用气压 Work Pressure	推荐转速 Recommended rotation speed	耗风量/Air Consumption	
		1.0Mpa	1.5Mpa
1.0-1.7 Mpa	30-50 r/min	$4m^3$/min	$7m^3$/min

N3

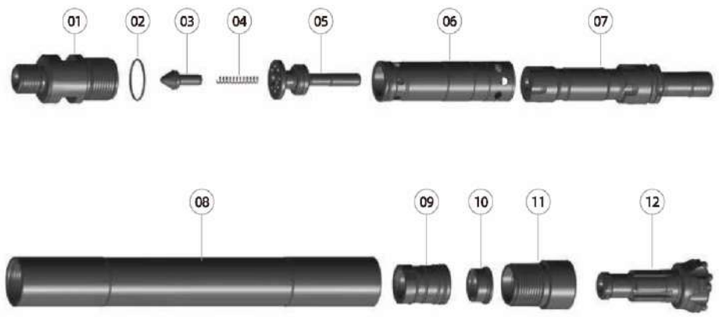

Ref.	部件 Parts	单重 Weight	件号 Part No.	Ref.	部件 Parts	单重 Weight	件号 Part No.
01	接头 Top Sub	3.55 Kg	01-N3-01	07	活塞 Piston	4.7 Kg	01-N3-07
02	O形圈 "O"Ring	0.01 Kg	01-N3-02	08	外缸 Piston Case	7.5 Kg	01-N3-08
03	逆止阀 Check Valve	0.12 Kg	01-N3-03	09	衬套 Guided Sleeve	0.9 Kg	01-N3-09
04	弹簧 Spring	0.01 Kg	01-N3-04	10	卡环 Retainer Ring	0.2 Kg	01-N3-10
05	配气座 Valve Seat	0.7 Kg	01-N3-05	11	卡钎套 Drive Chuckk	1.75 Kg	01-N3-11
06	内缸 Inner Cylinder	1 Kg	01-N3-06	12	钻头 Drill Bit		01-N3-12

技术参数 / Technical Parameters

总长（不含钻头）Length(Less bit)	总重 Weight	冲击器外径 Outer Diameter	接头螺纹 Connection Thread	钻头钎柄 Bit Shank	钻孔范围 Hole Range
771.5mm	20.5Kg	¢80mm	T48X10	N3	¢87-¢110mm

适用气压 Work Pressure	推荐转速 Recommended rotation speed	耗风量/Air Consumption	
		1.0Mpa	1.5Mpa
0.8-1.7 Mpa	30-60 r/min	$5m^3$/min	$7m^3$/min

N4

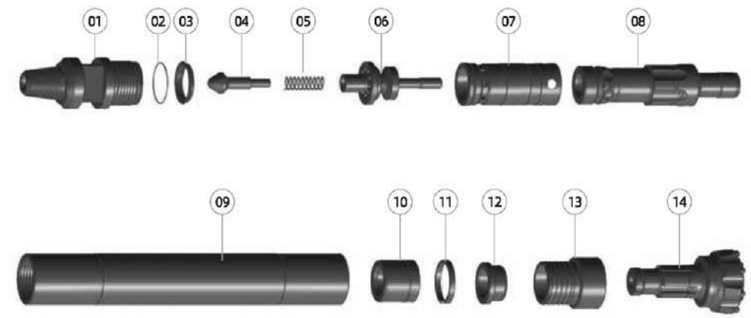

Ref.	部件 Parts	单重 Weight	件号 Part No.	Ref.	部件 Parts	单重 Weight	件号 Part No.
01	接头 Top Sub	6.65 Kg	01-N4-01	09	外缸 Piston Case	12.1 Kg	01-N4-09
02	O形圈 "O"Ring	0.01 KG	01-N4-02	10	衬套 Guided Sleeve	1.6 Kg	01-N4-10
03	承压垫 Bearing Pad	0.12 Kg	01-N4-03	11	挡圈 Retaining Ring	0.1 Kg	01-N4-11
04	逆止阀 Check Valve	0.41 Kg	01-N4-04	12	卡环 Retainer Ring	0.5 Kg	01-N4-12
05	弹簧 Spring	0.05 Kg	01-N4-05	13	卡钎套 Drive Chuckk	2.9 Kg	01-N4-13
06	配气座 Valve Seat	1.4 Kg	01-N4-06	14	钻头 Drill Bit		01-N4-14
07	内缸 Inner Cylinder	1.4 Kg	01-N4-07				
08	活塞 Piston	7.8 Kg	01-N4-08				

技术参数 / Technical Parameters

总长（不含钻头）Length(Less bit)	总重 Weight	冲击器外径 Outer Diameter	接头螺纹 Connection Thread	钻头钎柄 Bit Shank	钻孔范围 Hole Range
856mm	35Kg	¢100mm	API2 3/8"REG	N4	¢108-¢135mm

适用气压 Work Pressure	推荐转速 Recommended rotation speed	耗风量/Air Consumption	
		1.0Mpa	1.5Mpa
0.8-1.9 Mpa	30-60 r/min	$5.5m^3$/min	$9m^3$/min

LOW AIR PRESSURE HAMMERS

110P-2.8KW (Bayonet)

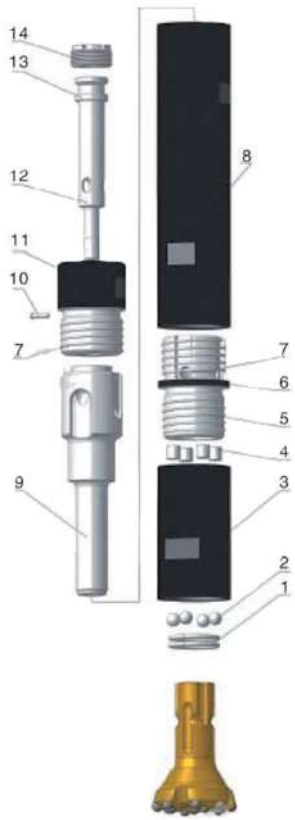

Product Data	
Hammer Length without bit	662 mm
Top sub thread	F72x10 BOX
Outside diameter	98 mm
Weight	24 kg
Bit diameter	110-140 mm
Working pressure	7-11 Bar
Air consumption	7-12 m³/min
Bit shank	KNSH-110

No.	Part Name	Part No.	No.	Part Name	Part No.
1	Retainer Ring	110P-B-01	9	Piston	110P-B-09
2	Ball	110P-B-02	10	Retainer	110P-B-10
3	Driver Sub	110P-B-03	11	Top Sub	110P-B-11
4	Roller	110P-B-04	12	Air Distribution Tube	110P-B-12
5	Thread	110P-B-05	13	Seat	110P-B-13
6	Guide Sleeve	110P-B-06	14	Adjusting Nut	110P-B-14
7	Thread	110P-B-07			
8	Outer Sleeve	110P-B-08			

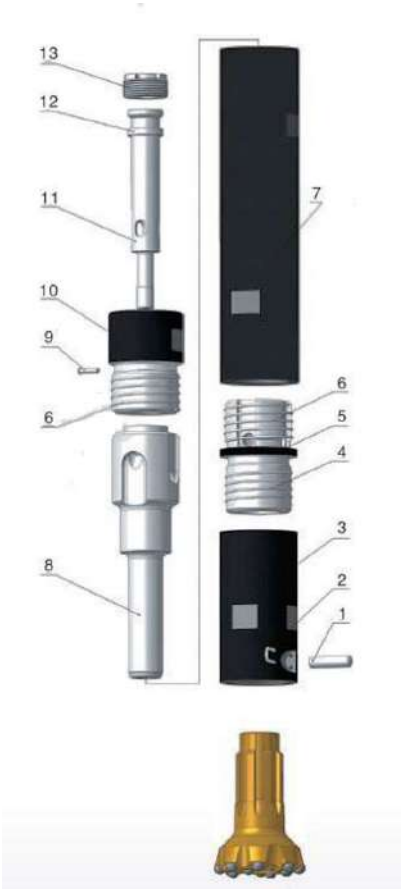

LOW AIR PRESSURE HAMMERS

110P-2.8KW (Spline)

Product Data	
Hammer Length without bit	670 mm
Top sub thread	F72x10 BOX
Outside diameter	98 mm
Weight	25.5 kg
Bit diameter	110-140 mm
Working pressure	7-11 Bar
Air consumption	7-12 m³/min
Bit shank	KNSH-110

No.	Part Name	Part No.	No.	Part Name	Part No.
1	Pin	110P-S-01	9	Piston Retainer	110P-S-09
2	Bracket	110P-S-02	10	Top Sub	110P-S-10
3	Driver Sub	110P-S-03	11	Air Distribution Tube	110P-S-11
4	Thread	110P-S-04	12	Seat	110P-S-12
5	Guide Sleeve	110P-S-05	13	Adjusting Nut	110P-S-13
6	Thread	110P-S-06			
7	Outer Sleeve	110P-S-07			
8	Piston	110P-S-08			

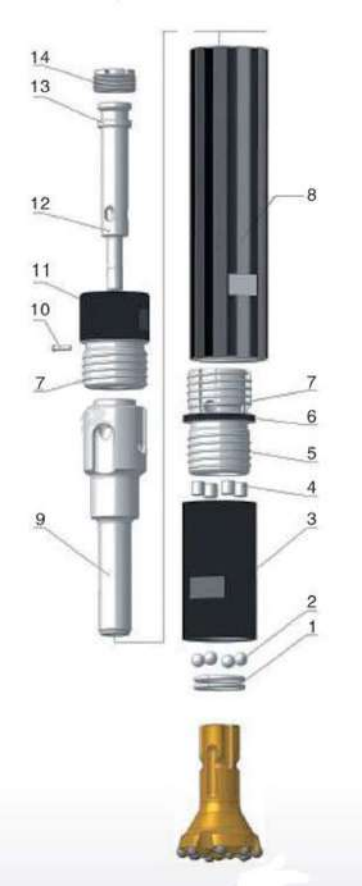

LOW AIR PRESSURE HAMMERS

110P-3.2KW (Bayonet)

Product Data	
Hammer Length without bit	672 mm
Top sub thread	F72x10 BOX
Outside diameter	103x98 mm
Weight	25.6 kg
Bit diameter	110-140 mm
Working pressure	7-11 Bar
Air consumption	7-12 m³/min
Bit shank	KNSH-110

No.	Part Name	Part No.	No.	Part Name	Part No.
1	Retainer Ring	110P-B-01	9	Piston	110P-B-09
2	Ball	110P-B-02	10	Retainer	110P-B-10
3	Driver Sub	110P-B-03	11	Top Sub	110P-B-11
4	Roller	110P-B-04	12	Air Distribution Tube	110P-B-12
5	Thread	110P-B-05	13	Seat	110P-B-13
6	Guide Sleeve	110P-B-06	14	Adjusting Nut	110P-B-14
7	Thread	110P-B-07			
8	Outer Sleeve	110P-B-08			

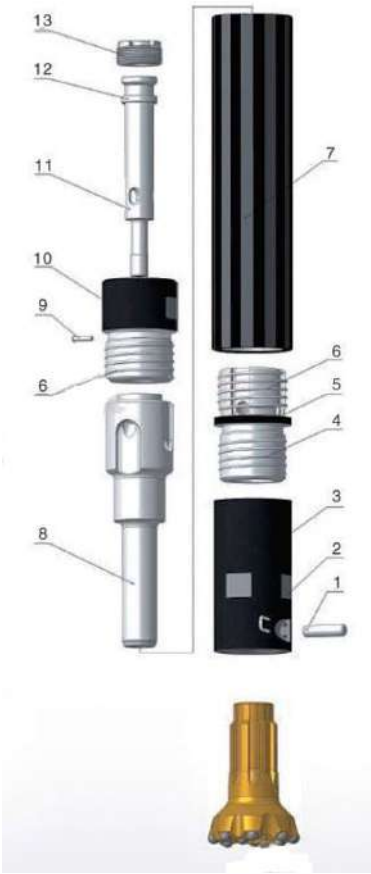

LOW AIR PRESSURE HAMMERS

110P-3.2KW (Spline)

Product Data	
Hammer Length without bit	681 mm
Top sub thread	F72x10 BOX
Outside diameter	103x98 mm
Weight	26 kg
Bit diameter	110-140 mm
Working pressure	7-11 Bar
Air consumption	7-12 m³/min
Bit shank	KNSH-110

No.	Part Name	Part No.	No.	Part Name	Part No.
1	Pin	110P-S-01	9	Piston Retainer	110P-S-09
2	Bracket	110P-S-02	10	Top Sub	110P-S-10
3	Driver Sub	110P-S-03	11	Air Distribution Tube	110P-S-11
4	Thread	110P-S-04	12	Seat	110P-S-12
5	Guide Sleeve	110P-S-05	13	Adjusting Nut	110P-S-13
6	Thread	110P-S-06			
7	Outer Sleeve	110P-S-07			
8	Piston	110P-S-08			

02

DTH DRILL BITS

DOWN THE HOLE BITS

The Application of DTH Hammer

DTH hammers and bits are widely used in quarrying, mining, water well drilling, construction, and blast hole drilling. It is suitable for drilling in various hard and abrasive rock formations.

Advantages of DTH Drill Bits

- High penetration rate and drilling efficiency.
- Superior wear resistancn and long service life.
- Down-the-hole delsign for straight and accurate drilling.
- Various bit diameters and designs for different drilling conditions.
- High-quality steel and premium carbide buttons ensure reliable performance.
- Optimized flushing design for better cuttings removal and higher drilling speed.

Advantages of New Diamond Dives Drilling

- Suitable for medium to very hard and very abrasive formations.
- High drilling efficiency, fast drilling rate.
- High drilling accuracy, the drill holes have less deviation, less roundness, and good straightness.
- Low air consumption.
- We adopt high-quality new diamond materials and advanced heat treatment technology for longer life.
- High wear resistance and impact resistance.
- With excellent service life, the product passes the hardest quality testing, such as impact test, abrasion test, hardness test, and metallographic microscope test.

Drill Bit Design

Flat Face Drill Bit	Convex Face Drill Bit	Concave Face Drill Bit
Extreme-Convex Face Drill Bit	**Double Gauge Face Drill Bit**	**Drop-Center Face Drill Bit**
Low Air Pressure Bit Design	**High Blast Design**	**QL DTH Bit**

Drill Bit Characteristics

Flat Face

This flat face is suitable for drilling very hard rock formations and abrasive wear formations of low to medium, when the hole is drilling, the faster the drilling speed, the less wear of the drill body.

Concave Face

This concave face is suitable for all rock formations, especially in medium-hard and homogeneous rock formations, the effect is good. The blast hole deviation is small, and the slag discharge effect is good.

Drop Center

When using low-medium pressure to drill soft-medium hard and fractured rock formations, in order to obtain fast rock drilling speed and less blast hole slope, this face shape is usually used.

Convex Face

This convex face is suitable for low- to medium-pressure drilling of soft-medium hard rock formations, and the drill block is not easy to corrode. The characteristics of this design are the low load of the side button, the wear is not heavy, and the drilling speed is fast.

Double Gauge Face

This double-sided button face is suitable for drilling very hard rock formations at high air pressures, when the bit is drilling, drilling speed is fast, the bit body wear will also be less.

Carbide Button Shape Selection

Tooth Profile	Product Name	Application
Dome Button		Dome-shaped buttons are usually used in gauge locations of DTH bits, suitable for very abrasive and very hard formations.
Parabolic Button		Parabolic buttons are usually used at gauge locations and front buttons of DTH bits, suitable for medium abrasive and very hard formations.
Ballistic Button		Ballistic buttons are usually used at front buttons of the bits, suitable for medium abrasive and medium hard formations. They can also be used as gauge locations.
Sharp Button		Sharp buttons are usually used in soft formations of DTH bits for soft formations, suitable for high-arsenical applications with straight and smooth.
Flat Button		Flat buttons are usually used as protection buttons to reduce wear on rubbing surface of DTH bits.

Main Technical Features

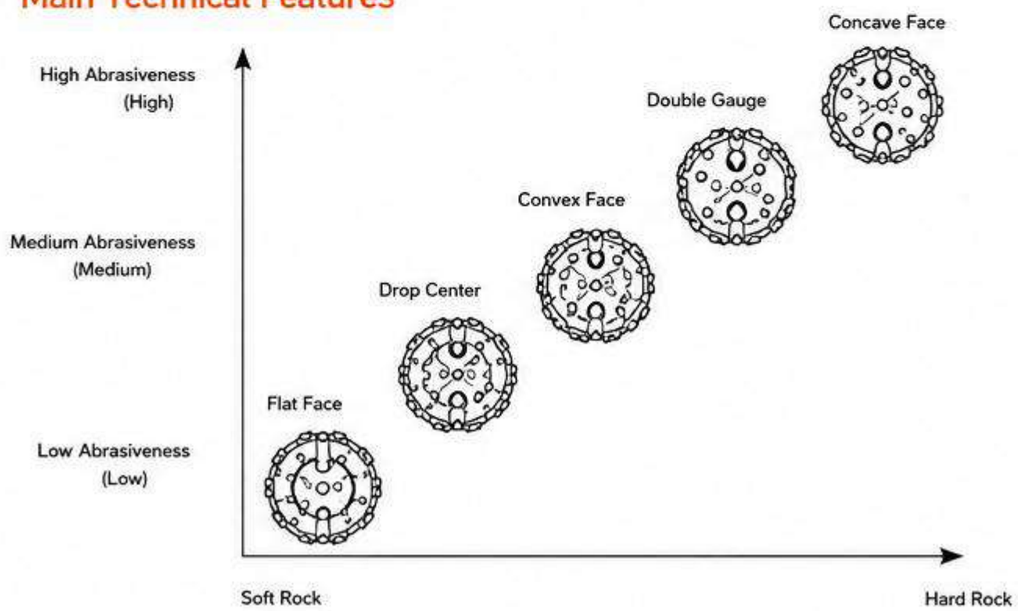

High Air Pressure DTH Drill Bit

SP系列钻头/ SP Shank Drill Bits

头部规格 Specification / 钻头规格 Specifications	头部形状 Head Shape	钻头头部直径 Head Diameter (mm)	尾柄长度 Shank Length	花键数 Spline	排气孔数量 Port holes	合金数量X直径 Button qty.pcs X dia.mm: 齿型 Button Type (选购件 Optional)	边齿 Gauge Buttons	芯齿 Front buttons	重量 Weight (Kg)
SP35A									
	平面 Flat Face	90	150	6	2	球齿+弹头齿 Domed+Ballistic	6XØ14	5XØ12	4.3
	平面 Flat Face	95	150	6	2	球齿+弹头齿 Domed+Ballistic	6XØ14	5XØ12	4.4
	平面 Flat Face	100	150	6	2	球齿+弹头齿 Domed+Ballistic	6XØ14	6XØ12	4.6
	平面 Flat Face	108	150	6	2	球齿+弹头齿 Domed+Ballistic	8XØ13	6XØ12	4.9
SP480									
	凸面 Convex Face	108	165	10	2	球齿+弹头齿 Domed+Ballistic	7XØ16	6XØ14	7.3
	凸面 Convex Face	115	165	10	2	球齿+弹头齿 Domed+Ballistic	7XØ16	6XØ14	7.7
	凸面 Convex Face	127	165	10	2	球齿+弹头齿 Domed+Ballistic	8XØ16	4XØ14+3XØ13	8.7
	凸面 Convex Face	130	165	10	2	球齿+弹头齿 Domed+Ballistic	8XØ16	4XØ14+3XØ13	8.8
SP580									
	凸面 Convex Face	140	185	10	2	球齿+弹头齿 Domed+Ballistic	7XØ18	4XØ15+3XØ14	13.2
	平面 Flat Face	146	185	10	2	球齿 Domed	8XØ18	8XØ14	13.9
	平面 Flat Face	152	185	10	2	球齿+弹头齿 Domed+Ballistic	8XØ18	8XØ14	14.3
	平面 Flat Face	165	185	10	2	球齿+弹头齿 Domed+Ballistic	8XØ18	9XØ14	16.3
	凹面 Concave Face	178	185	10	2	球齿 Domed	8XØ18	6XØ16+5XØ14	17.8
SP680									
	凹面 Concave Face	154	231	12	2	球齿 Domed	8XØ18	4XØ16+4XØ15	21.6
	平面 Flat Face	165	231	12	2	球齿+弹头齿 Domed+Ballistic	8XØ18	8XØ16	21.8
	凹面 Concave Face	171	231	12	2	球齿 Domed	8XØ18	6XØ16+4XØ15	23.3
	凹面 Concave Face	178	231	12	2	球齿 Domed	8XØ18	6XØ16+5XØ15	24.3
	凹面 Concave Face	190	231	12	3	球齿 Domed	9XØ18	6XØ16+5XØ15	25.5
	凹面 Concave Face	203	231	12	2	球齿 Domed	10XØ18	8XØ16+6XØ15	28.7
SP780									
	凹面 Concave Face	190	220	10	3	球齿 Domed	9XØ18	6XØ16+5XØ15	29.5
	凹面 Concave Face	195	220	10	3	球齿 Domed	9XØ18	6XØ16+5XØ15	30.3
	凹面 Concave Face	203	220	10	2	球齿 Domed	10XØ18	8XØ16+6XØ15	31.5
SP781									
	凹面 Concave Face	190	250	8	3	球齿 Domed	9XØ18	6XØ16+5XØ15	29.5
	凹面 Concave Face	195	250	8	3	球齿 Domed	9XØ18	6XØ16+5XØ15	30.7
	凹面 Concave Face	203	250	8	2	球齿 Domed	10XØ18	8XØ16+6XØ15	32

SP系列钻头/ SP Shank Drill Bits

头部规格 Specification / 钻头规格 Specifications	头部形状 Head Shape	钻头头部直径 Head Diameter (mm)	尾柄长度 Shank Length	花键数 Spline	排气孔数量 Port holes	合金数量X直径 Button qty.pcs X dia.mm: 齿型 Button Type (选购件 Optional)	边齿 Gauge Buttons	芯齿 Front buttons	重量 Weight (Kg)
SP882									
	凹面 Concave Face	203	260	12	2	球齿 Domed	10XØ18	4XØ18+10XØ16	43.5
	凹面 Concave Face	216	260	12	2	球齿 Domed	10XØ18	4XØ18+10XØ16	47
	凹面 Concave Face	230	260	12	2	球齿 Domed	12XØ18	12XØ18+6XØ16	50
	凹面 Concave Face	235	260	12	2	球齿 Domed	12XØ18	12XØ18+6XØ16	50.5
	凹面 Concave Face	254	260	12	2	球齿 Domed	12XØ18	12XØ18+8XØ16	57.5
	凸凹面 Convex- Concave Face	275	260	12	2	球齿 Domed	12XØ18	8XØ16+19XØ16	64
	凸凹面 Convex- Concave Face	305	260	12	3	球齿 Domed	15XØ18	12XØ16+23XØ16	72.5
SP1080									
	凸凹面 Convex- Concave Face	254	310	12	2	球齿 Domed	12XØ19	8XØ18+19XØ16	82.5
	凸凹面 Convex- Concave Face	275	310	12	2	球齿 Domed	12XØ19	8XØ18+20XØ16	87
	凸凹面 Convex- Concave Face	305	310	12	3	球齿 Domed	15XØ19	27XØ18+8XØ16	97
	凸凹面 Convex- Concave Face	325	310	12	3	球齿 Domed	15XØ19	27XØ18+9XØ16	105
	凸凹面 Convex- Concave Face	350	310	12	4	球齿 Domed	16XØ19	32XØ18+14XØ16	115
	凸凹面 Convex- Concave Face	400	310	12	4	球齿 Domed	16XØ19	40XØ18+25XØ16	140
SP1280									
	凸凹面 Convex- Concave Face	305	375	12	3	球齿 Domed	15XØ20	27XØ18+8XØ16	140.5
	凸凹面 Convex- Concave Face	311	375	12	3	球齿 Domed	15XØ20	27XØ18+8XØ16	141
	凸凹面 Convex- Concave Face	325	375	12	3	球齿 Domed	15XØ20	27XØ18+9XØ16	150
	凸凹面 Convex- Concave Face	350	375	12	4	球齿 Domed	16XØ20	32XØ18+13XØ16	168
	凸凹面 Convex- Concave Face	381	375	12	4	球齿 Domed	16XØ20	36XØ18+18XØ16	178
	凸凹面 Convex- Concave Face	400	375	12	4	球齿 Domed	16XØ20	40XØ18+28XØ16	193.5
	凸凹面 Convex- Concave Face	445	375	12	4	球齿 Domed	20XØ20	48XØ18+25XØ16	231.5
	凸凹面 Convex- Concave Face	500	375	12	4	球齿 Domed	24XØ20	90XØ18	287
SP1480									
	双边齿凹面 Double guage button concave face	450	405	12	4	球齿 Domed	20XØ20	16XØ19+57XØ18	291.5
	双边齿凹面 Double guage button concave face	500	405	12	4	球齿 Domed	24XØ20	16XØ19+73XØ18	340
	双边齿凹面 Double guage button concave face	550	405	12	4	球齿 Domed	24XØ20	16XØ19+79XØ18	397
	双边齿凹面 Double guage button concave face	600	405	12	4	球齿 Domed	24XØ20	16XØ19+96XØ18	469

DHD系列钻头/ DHD Shank Drill Bits

HD25A

头部规格 Specification / 钻头规格 Specifications	头部形状 Head Shape	钻头头部直径 Head Diameter (mm)	尾柄长度 Shank Length	花键数 Spline	排气孔数量 Port holes	合金数量X直径 Button qty.pcs X dia.mm: 齿型 Button Type (选购件 Optional)	边齿 Gauge Buttons	芯齿 Front buttons	重量 Weight (Kg)
	平面 Flat Face	76	174	6	2	弹头齿 Ballistic	6XØ14	4XØ11	3.2
	平面 Flat Face	80	174	6	2	弹头齿 Ballistic	6XØ14	4XØ11	3.3
	平面 Flat Face	85	174	6	2	弹头齿 Ballistic	6XØ14	4XØ12	3.4
	平面 Flat Face	90	174	6	2	弹头齿 Ballistic	6XØ14	4XØ12	3.6

DHD3.5

	平面 Flat Face	90	180	8	2	球齿+弹头齿 Spherical+Ballistic	6XØ14	5XØ12	4.7
	平面 Flat Face	95	180	8	2	球齿+弹头齿 Spherical+Ballistic	6XØ14	5XØ12	4.8
	平面 Flat Face	100	180	8	2	球齿+弹头齿 Spherical+Ballistic	6XØ14	6XØ12	4.9
	平面 Flat Face	108	180	8	2	球齿+弹头齿 Spherical+Ballistic	8XØ13	6XØ12	5.4

DHD3.5A

	平面 Flat Face	90	180	8	2	球齿+弹头齿 Spherical+Ballistic	6XØ14	5XØ12	4.7
	平面 Flat Face	95	180	8	2	球齿+弹头齿 Spherical+Ballistic	6XØ14	5XØ12	4.8
	平面 Flat Face	100	180	8	2	球齿+弹头齿 Spherical+Ballistic	6XØ14	6XØ12	4.9
	平面 Flat Face	108	180	8	2	球齿+弹头齿 Spherical+Ballistic	8XØ13	6XØ12	5.4

DHD340

	凸面 Convex Face	108	209	8	2	球齿+弹头齿 Spherical+Ballistic	7XØ16	6XØ14	7.85
	凸面 Convex Face	115	209	8	2	球齿+弹头齿 Spherical+Ballistic	7XØ16	6XØ14	8.22
	凸面 Convex Face	127	209	8	2	球齿+弹头齿 Spherical+Ballistic	8XØ16	4XØ14+3XØ13	8.88
	凸面 Convex Face	130	209	8	2	球齿+弹头齿 Spherical+Ballistic	8XØ16	4XØ14+3XØ13	9.15

DHD340A

	凸面 Convex Face	108	209	8	2	球齿+弹头齿 Spherical+Ballistic	7XØ16	6XØ14	7.85
	凸面 Convex Face	115	209	8	2	球齿+弹头齿 Spherical+Ballistic	7XØ16	6XØ14	8.22
	凸面 Convex Face	127	209	8	2	球齿+弹头齿 Spherical+Ballistic	8XØ16	4XØ14+3XØ13	8.88
	凸面 Convex Face	130	209	8	2	球齿+弹头齿 Spherical+Ballistic	8XØ16	4XØ14+3XØ13	9.15

DHD350

	凸面 Convex Face	140	260	8	2	球齿+弹头齿 Spherical+Ballistic	7XØ18	4XØ15+3XØ14	15.8
	平面 Flat Face	146	260	8	2	球齿+弹头齿 Spherical+Ballistic	8XØ18	8XØ14	16.5
	平面 Flat Face	152	260	8	2	球齿+弹头齿 Spherical+Ballistic	8XØ18	8XØ14	17
	凹面 Concave Face	165	260	8	2	球齿 Spherical	8XØ18	4XØ16+4XØ14	18.9
	凹面 Concave Face	178	260	8	2	球齿 Spherical	8XØ18	6XØ16+5XØ14	20.4

DHD350A

	凸面 Convex Face	140	260	8	2	球齿+弹头齿 Spherical+Ballistic	7XØ18	4XØ15+3XØ14	15.8
	平面 Flat Face	146	260	8	2	球齿+弹头齿 Spherical+Ballistic	8XØ18	8XØ14	16.5
	平面 Flat Face	152	260	8	2	球齿+弹头齿 Spherical+Ballistic	8XØ18	8XØ14	17
	凹面 Concave Face	165	260	8	2	球齿 Spherical	8XØ18	4XØ16+4XØ14	18.9
	凹面 Concave Face	178	260	8	2	球齿 Spherical	8XØ18	6XØ16+5XØ14	20.4

DHD350S

	凸面 Convex Face	127	260	8	2	球齿+弹头齿 Spherical+Ballistic	8XØ18	6XØ16	14.5
	凸面 Convex Face	130	260	8	3	球齿+弹头齿 Spherical+Ballistic	9XØ16	6XØ15+4XØ14	14.7

DHD360

	凹面 Concave Face	154	308.5	8	2	球齿 Domed	8XØ18	4XØ16+4XØ15	22.5
	平面 Flat Face	165	308.5	8	2	球齿 Domed	8XØ18	8XØ16	23.6
	凹面 Concave Face	171	308.5	8	2	球齿 Domed	8XØ18	6XØ16+4XØ15	25.2
	凹面 Concave Face	178	308.5	8	2	球齿 Domed	8XØ18	6XØ16+5XØ15	26.1
	凹面 Concave Face	190	308.5	8	3	球齿 Domed	9XØ18	6XØ16+5XØ15	29
	凹面 Concave Face	203	308.5	8	2	球齿 Domed	10XØ18	8XØ16+6XØ15	30.4

DHD360A

	凹面 Concave Face	154	308.5	8	2	球齿 Domed	8XØ18	4XØ16+4XØ15	22.5
	平面 Flat Face	165	308.5	8	2	球齿 Domed	8XØ18	8XØ16	23.6
	凹面 Concave Face	171	308.5	8	2	球齿 Domed	8XØ18	6XØ16+4XØ15	25.2
	凹面 Concave Face	178	308.5	8	2	球齿 Domed	8XØ18	6XØ16+5XØ15	26.1
	凹面 Concave Face	190	308.5	8	3	球齿 Domed	9XØ18	6XØ16+5XØ15	29
	凹面 Concave Face	203	308.5	8	2	球齿 Domed	10XØ18	8XØ16+6XØ15	30.4

DHD380

	凹面 Concave Face	203	350	10	2	球齿 Domed	10XØ18	4XØ18+10XØ16	48.5
	凹面 Concave Face	216	350	10	2	球齿 Domed	10XØ18	4XØ18+10XØ16	52.1
	凹面 Concave Face	230	350	10	2	球齿 Domed	12XØ18	12XØ18+6XØ16	54.8
	凹面 Concave Face	235	350	10	2	球齿 Domed	12XØ18	12XØ18+6XØ16	55.5
	凹面 Concave Face	254	350	10	2	球齿 Domed	12XØ18	12XØ18+8XØ16	62.4
	凸凹面 Convex- Concave Face	275	350	10	2	球齿 Domed	12XØ18	27XØ16	69
	凸凹面 Convex- Concave Face	305	350	10	3	球齿 Domed	15XØ18	35XØ16	77.6

DHD380A

	凹面 Concave Face	203	350	10	2	球齿 Domed	10XØ18	4XØ18+10XØ16	48.5
	凹面 Concave Face	216	350	10	2	球齿 Domed	10XØ18	4XØ18+10XØ16	52.1
	凹面 Concave Face	230	350	10	2	球齿 Domed	12XØ18	12XØ18+6XØ16	54.8
	凹面 Concave Face	235	350	10	2	球齿 Domed	12XØ18	12XØ18+6XØ16	55.5
	凹面 Concave Face	254	350	10	2	球齿 Domed	12XØ18	12XØ18+8XØ16	62.4
	凸凹面 Convex- Concave Face	275	350	10	2	球齿 Domed	12XØ18	8XØ16+19XØ16	69
	凸凹面 Convex- Concave Face	305	350	10	3	球齿 Domed	15XØ18	12XØ16+23XØ16	77.6

DHD1120

	凸凹面 Convex- Concave Face	305	490	8	3	球齿 Domed	15XØ20	27XØ18+8XØ16	141.3
	凸凹面 Convex- Concave Face	311	490	8	3	球齿 Domed	15XØ20	27XØ18+8XØ16	141.6
	凸凹面 Convex- Concave Face	325	490	8	3	球齿 Domed	15XØ20	27XØ18+9XØ16	164.3
	凸凹面 Convex- Concave Face	350	490	8	4	球齿 Domed	16XØ20	32XØ18+13XØ16	169.1
	凸凹面 Convex- Concave Face	381	490	8	4	球齿 Domed	16XØ20	36XØ18+18XØ16	183
	凸凹面 Convex- Concave Face	400	490	8	4	球齿 Domed	16XØ20	40XØ18+28XØ16	194
	凸凹面 Convex- Concave Face	445	490	8	4	球齿 Domed	20XØ20	48XØ18+25XØ16	225.7
	凸凹面 Convex- Concave Face	500	490	8	4	球齿 Domed	24XØ20	90XØ18	331.2

QL系列钻头/ QL Shank Drill Bits

钻头规格 Specifications \ 头部规格 Specification	头部形状 Head Shape	钻头头部直径 Head Diameter (mm)	尾柄长度 Shank Length	花键数 Spline	排气孔数量 Port holes	合金数量X直径 Button qty.pcs X dia.mm: 齿型 Button Type (选购件 Optional)	边齿 Gauge Buttons	芯齿 Front buttons	重量 Weight (Kg)
QL40									
	凸面 Convex Face	108	280	10	2	球齿+弹头齿 Domed+Ballistic	7XØ16	6XØ14	9.42
	凸面 Convex face	115	280	10	2	球齿+弹头齿 Domed+Ballistic	7XØ16	6XØ14	9.5
	凸面 Convex face	127	280	10	2	球齿+弹头齿 Domed+Ballistic	8XØ16	4XØ14+3XØ13	10.7
	凸面 Convex face	130	280	10	2	球齿+弹头齿 Domed+Ballistic	8XØ16	4XØ14+3XØ13	10.9
QL40A									
	凸面 Convex Face	108	280	10	2	球齿+弹头齿 Domed+Ballistic	7XØ16	6XØ14	9.42
	凸面 Convex Face	115	280	10	2	球齿+弹头齿 Domed+Ballistic	7XØ16	6XØ14	9.5
	凸面 Convex Face	127	280	10	2	球齿+弹头齿 Domed+Ballistic	8XØ16	4XØ14+3XØ13	10.7
	凸面 Convex Face	130	280	10	2	球齿+弹头齿 Domed+Ballistic	8XØ16	4XØ14+3XØ13	10.9
QL50									
	凸面 Convex Face	140	240	12	a2	球齿+弹头齿 Domed+Ballistic	7XØ18	4XØ15+3XØ14	15.3
	平面 Flat Face	146	240	12	2	球齿+弹头齿 Domed+Ballistic	8XØ18	8XØ14	16
	平面 Flat Face	152	240	12	2	球齿+弹头齿 Domed+Ballistic	8XØ18	8XØ14	16.5
	凹面 Concave Face	165	240	12	2	球齿 Domed	8XØ18	4XØ16+4XØ14	18.5
	凹面 Concave Face	178	240	12	2	球齿 Domed	8XØ18	6XØ16+5XØ14	20
QL50A									
	凸面 Convex Face	140	240	12	2	球齿+弹头齿 Domed+Ballistic	7XØ18	4XØ15+3XØ14	15.3
	平面 Flat Face	146	240	12	2	球齿+弹头齿 Domed+Ballistic	8XØ18	8XØ14	16
	平面 Flat Face	152	240	12	2	球齿+弹头齿 Domed+Ballistic	8XØ18	8XØ14	16.5
	凹面 Concave Face	165	240	12	2	球齿 Domed	8XØ18	4XØ16+4XØ14	18.5
	凹面 Concave Face	178	240	12	2	球齿 Domed	8XØ18	6XØ16+5XØ14	20
QL60									
	凹面 Concave Face	154	253	12	2	球齿 Domed	8XØ18	4XØ16+4XØ15	22.5
	平面 Flat Face	165	253	12	2	球齿 Domed	8XØ18	8XØ16	23
	凹面 Concave Face	171	253	12	2	球齿 Domed	8XØ18	6XØ16+4XØ15	24.4
	凹面 Concave Face	178	253	12	2	球齿 Domed	8XØ18	6XØ16+5XØ15	25.3
	凹面 Concave Face	190	253	12	3	球齿 Domed	9XØ18	6XØ16+5XØ15	26.5
	凹面 Concave Face	203	253	12	2	球齿 Domed	10XØ18	8XØ16+6XØ15	29.7
QL680									
	凹面 Concave Face	154	253	12	2	球齿 Domed	8XØ18	4XØ16+4XØ15	22.5
	平面 Flat Face	165	253	12	2	球齿 Domed	8XØ18	8XØ16	23
	凹面 Concave Face	171	253	12	2	球齿 Domed	8XØ18	6XØ16+4XØ15	24.4
	凹面 Concave Face	178	253	12	2	球齿 Domed	8XØ18	6XØ16+5XØ15	25.3
	凹面 Concave Face	190	253	12	3	球齿 Domed	9XØ18	6XØ16+5XØ15	26.5
	凹面 Concave Face	203	253	12	2	球齿 Domed	10XØ18	8XØ16+6XØ15	29.7

QL80									
	凹面 Concave Face	203	331	16	2	球齿 Domed	10XØ18	4XØ18+10XØ16	48.2
	凹面 Concave Face	216	331	16	2	球齿 Domed	10XØ18	4XØ18+10XØ16	51.9
	凹面 Concave Face	230	331	16	2	球齿 Domed	12XØ18	12XØ18+6XØ16	54.7
	凹面 Concave Face	235	331	16	2	球齿 Domed	12XØ18	12XØ18+6XØ16	55.3
	凹面 Concave Face	254	331	16	2	球齿 Domed	12XØ18	12XØ18+8XØ16	62.2
	凸凹面 Convex- Concave Face	275	331	16	2	球齿 Domed	12XØ18	8XØ16+19XØ16	68.8
	凸凹面 Convex- Concave Face	305	331	16	3	球齿 Domed	15XØ18	12XØ16+23XØ16	77.3
QL880									
	凹面 Concave Face	203	331	16	2	球齿 Domed	10XØ18	4XØ18+10XØ16	48.2
	凹面 Concave Face	216	331	16	2	球齿 Domed	10XØ18	4XØ18+10XØ16	51.9
	凹面 Concave Face	230	331	16	2	球齿 Domed	12XØ18	12XØ18+6XØ16	54.7
	凹面 Concave Face	235	331	16	2	球齿 Domed	12XØ18	12XØ18+6XØ16	55.3
	凹面 Concave Face	254	331	16	2	球齿 Domed	12XØ18	12XØ18+8XØ16	62.2
	凸凹面 Convex- Concave Face	275	331	16	2	球齿 Domed	12XØ18	8XØ16+19XØ16	68.8
	凸凹面 Convex- Concave Face	305	331	16	3	球齿 Domed	15XØ18	12XØ16+23XØ16	77.3

NUMA系列钻头/ Numa Shank Drill Bits

钻头规格 Specifications \ 头部规格 Specification	头部形状 Head Shape	钻头头部直径 Head Diameter (mm)	尾柄长度 Shank Length	花键数 Spline	排气孔数量 Port holes	合金数量X直径 Button qty.pcs X dia.mm: 齿型 Button Type (选购件 Optional)	边齿 Gauge Buttons	芯齿 Front buttons	重量 Weight (Kg)
NUMA100									
	凸凹面 Convex- Concave Face	254	375	10	2	球齿 Domed	12XØ19	8XØ18+19XØ16	89
	凸凹面 Convex- Concave Face	275	375	10	2	球齿 Domed	12XØ19	8XØ18+20XØ16	93.5
	凸凹面 Convex- Concave Face	305	375	10	3	球齿 Domed	15XØ19	27XØ18+8XØ16	103.5
	凸凹面 Convex- Concave Face	325	375	10	3	球齿 Domed	15XØ19	27XØ18+9XØ16	112
	凸凹面 Convex- Concave Face	350	375	10	4	球齿 Domed	16XØ19	32XØ18+14XØ16	121
	凸凹面 Convex- Concave Face	400	375	10	4	球齿 Domed	16XØ19	40XØ18+25XØ16	146.5
NUMA100A									
	凸凹面 Convex- Concave Face	254	375	10	2	球齿 Domed	12XØ19	8XØ18+19XØ16	89
	凸凹面 Convex- Concave Face	275	375	10	2	球齿 Domed	12XØ19	8XØ18+20XØ16	93.5
	凸凹面 Convex- Concave Face	305	375	10	3	球齿 Domed	15XØ19	27XØ18+8XØ16	103.5
	凸凹面 Convex- Concave Face	325	375	10	3	球齿 Domed	15XØ19	27XØ18+9XØ16	112
	凸凹面 Convex- Concave Face	350	375	10	4	球齿 Domed	16XØ19	32XØ18+14XØ16	121
	凸凹面 Convex- Concave Face	400	375	10	4	球齿 Domed	16XØ19	40XØ18+25XØ16	146.5
N125									
	凸凹面 Convex- Concave Face	305	491	10	3	球齿 Domed	15XØ20	27XØ18+8XØ16	175.5
	凸凹面 Convex- Concave Face	311	491	10	3	球齿 Domed	15XØ20	27XØ18+8XØ16	176
	凸凹面 Convex- Concave Face	325	491	10	3	球齿 Domed	15XØ20	27XØ18+9XØ16	185
	凸凹面 Convex- Concave Face	350	491	10	4	球齿 Domed	16XØ20	32XØ18+13XØ16	200
	凸凹面 Convex- Concave Face	381	491	10	4	球齿 Domed	16XØ20	36XØ18+18XØ16	213
	凸凹面 Convex- Concave Face	400	491	10	4	球齿 Dome	16XØ20	40XØ18+28XØ16	228.5
	凸凹面 Convex- Concave Face	445	491	10	4	球齿 Domed	20XØ20	48XØ18+25XØ16	266.5
	凸凹面 Convex- Concave Face	500	491	10	4	球齿 Domedd	24XØ20	90XØ18	322

W系列潜孔钻头/ W Shank Drill Bits

钻头规格 Specifications \ 头部规格 Specification	头部形状 Head Shape	钻头头部直径 Head Diameter (mm)	尾柄长度 Shank Length	花键数 Spline	排气孔数量 Port holes	合金数量X直径 Button qty.pcs X dia.mm 齿型 Button Type (选购件 Optional)	边齿 Gauge Buttons	芯齿 Front buttons	重量 Weight (Kg)
NK90									
	平面 Flat Face	90	130	8	2	球齿+弹头齿 Spherical+Ballistic	6XØ14	5XØ12	4
	平面 Flat Face	95	130	8	2	球齿+弹头齿 Spherical+Ballistic	6XØ14	5XØ12	4.15
	平面 Flat Face	100	130	8	2	球齿+弹头齿 Spherical+Ballistic	6XØ14	6XØ12	4.3
	平面 Flat Face	108	130	8	2	球齿+弹头齿 Spherical+Ballistic	8XØ13	6XØ12	4.7
WK40									
	凸面 Convex Face	108	143	8	2	球齿+弹头齿 Spherical+Ballistic	7XØ16	6XØ14	6.5
	凸面 Convex face	115	143	8	2	球齿+弹头齿 Spherical+Ballistic	7XØ16	6XØ14	6.9
	凸面 Convex face	127	143	8	2	球齿+弹头齿 Spherical+Ballistic	8XØ16	4XØ14+3XØ13	7.8
	凸面 Convex face	130	143	8	2	球齿+弹头齿 Spherical+Ballistic	8XØ16	4XØ14+3XØ13	8
WK50									
	凸面 Convex Face	140	170	8	2	球齿+弹头齿 Spherical+Ballistic	7XØ18	4XØ15+3XØ14	12.6
	平面 Flat Face	146	170	8	2	球齿 Domed	8XØ18	8XØ14	13.3
	平面 Flat Face	152	170	8	2	球齿+弹头齿 Spherical+Ballistic	8XØ18	8XØ14	13.8
	平面 Flat Face	165	170	8	2	球齿+弹头齿 Spherical+Ballistic	8XØ18	9XØ14	15.8
	凹面 Concave Face	178	170	8	2	球齿 Domed	8XØ18	6XØ16+5XØ14	17.2
WK60									
	凹面 Concave Face	154	200	10	2	球齿 Domed	8XØ18	4XØ16+4XØ15	19.6
	平面 Flat Face	165	200	10	2	球齿+弹头齿 Spherical+Ballistic	8XØ18	8XØ16	19.8
	凹面 Concave Face	171	200	10	2	球齿 Domed	8XØ18	6XØ16+4XØ15	21.3
	凹面 Concave Face	178	200	10	2	球齿 Domed	8XØ18	6XØ16+5XØ15	22.3
	凹面 Concave Face	190	200	10	2	球齿 Domed	9XØ18	6XØ16+5XØ15	23.5
	凹面 Concave Face	203	200	10	2	球齿 Domed	10XØ18	8XØ16+6XØ15	26.7

Mission系列钻头/ Mission Shank Drill Bits

钻头规格 Specifications \ 头部规格 Specification	头部形状 Head Shape	钻头头部直径 Head Diameter (mm)	尾柄长度 Shank Length	花键数 Spline	排气孔数量 Port holes	合金数量X直径 Button qty.pcs X dia.mm 齿型 Button Type (选购件 Optional)	边齿 Gauge Buttons	芯齿 Front buttons	重量 Weight (Kg)
Mission30									
	平面 Flat Face	90	225	8	2	球齿+弹头齿 Spherical+Ballistic	6XØ14	5XØ12	4.8
	平面 Flat Face	95	225	8	2	球齿+弹头齿 Spherical+Ballistic	6XØ14	5XØ12	4.9
	平面 Flat Face	100	225	8	2	球齿+弹头齿 Spherical+Ballistic	6XØ14	6XØ12	5.1
	平面 Flat Face	108	225	8	2	球齿+弹头齿 Spherical+Ballistic	8XØ13	6XØ12	5.4
Mission40									
	凸面 Convex Face	108	228	12	2	球齿+弹头齿 Spherical+Ballistic	7XØ16	6XØ14	7.8
	凸面 Convex Face	115	228	12	2	球齿+弹头齿 Spherical+Ballistic	7XØ16	6XØ14	8.2
	凸面 Convex Face	127	228	12	2	球齿+弹头齿 Spherical+Ballistic	8XØ16	4XØ14+3XØ13	9.2
	凸面 Convex Face	130	228	12	2	球齿+弹头齿 Spherical+Ballistic	8XØ16	4XØ14+3XØ13	9.3
Mission50									
	凸面 Convex Face	140	260	12	2	球齿+弹头齿 Spherical+Ballistic	7XØ18	4XØ15+3XØ14	13.9
	平面 Flat Face	146	260	12	2	球齿 Spherical	8XØ18	8XØ14	14.6
	平面 Flat Face	152	260	12	2	球齿+弹头齿 Spherical+Ballistic	8XØ18	8XØ14	15
	平面 Flat Face	165	260	12	2	球齿+弹头齿 Spherical+Ballistic	8XØ18	9XØ14	17
	凹面 Concave Face	178	260	12	2	球齿 Spherical	8XØ18	6XØ16+5XØ14	18.5
HM5C									
	凹面 Concave Face	140	231	8	2	球齿+弹头齿 Spherical+Ballistic	7XØ18	4XØ15+3XØ14	12.7
	平面 Flat Face	146	231	8	2	球齿 Spherical	8XØ18	8XØ14	13.4
	平面 Flat Face	152	231	8	2	球齿+弹头齿 Spherical+Ballistic	8XØ18	8XØ14	13.8
	平面 Flat Face	165	231	8	2	球齿+弹头齿 Spherical+Ballistic	8XØ18	9XØ14	15.8
	凹面 Concave Face	178	231	8	2	球齿 Spherical	8XØ18	6XØ16+5XØ14	17.3
Mission60									
	凹面 Concave Face	154	231	12	2	球齿 Spherical	8XØ18	4XØ16+4XØ15	20.3
	平面 Flat Face	165	231	12	2	球齿 Spherical	8XØ18	8XØ16	20.5
	凹面 Concave Face	171	231	12	2	球齿 Spherical	8XØ18	6XØ16+4XØ15	22
	凹面 Concave Face	178	231	12	2	球齿 Spherical	8XØ18	6XØ16+5XØ15	23
	凹面 Concave Face	190	231	12	3	球齿 Spherical	9XØ18	6XØ16+5XØ15	24
	凹面 Concave Face	203	231	12	2	球齿 Spherical	10XØ18	8XØ16+6XØ15	27.3
Mission80									
	凹面 Concave Face	203	329	12	2	球齿 Spherical	10XØ18	4XØ18+10XØ16	41.2
	凹面 Concave Face	216	329	12	2	球齿 Spherical	10XØ18	4XØ18+10XØ16	46
	凹面 Concave Face	230	329	12	2	球齿 Spherical	12XØ18	12XØ18+6XØ16	48.7
	凹面 Concave Face	235	329	12	2	球齿 Spherical	12XØ18	12XØ18+6XØ16	49.3
	凹面 Concave Face	254	329	12	2	球齿 Spherical	12XØ18	12XØ18+8XØ16	56.2
	凸凹面 Convex- Concave Face	275	329	12	2	球齿 Spherical	12XØ18	8XØ16+19XØ16	62.8
	凸凹面 Convex- Concave Face	305	329	12	3	球齿 Spherical	15XØ18	12XØ16+23XØ16	71.3

SD系列钻头/ SD Shank Drill Bits

头部规格 Specification / 钻头规格 Specifications	头部形状 Head Shape	钻头头部直径 Head Diameter (mm)	尾柄长度 Shank Length	花键数 Spline	排气孔数量 Port holes	合金数量X直径 Button qty.pcs X dia.mm			重量 Weight (Kg)
						齿型 Button Type (选购件 Optional)	边齿 Gauge Buttons	芯齿 Front buttons	
SD4									
	凸面 Convex Face	108	260	8	2	球齿+弹头齿 Spherical+Ballistic	7XØ16	6XØ14	9
	凸面 Convex Face	115	260	8	2	球齿+弹头齿 Spherical+Ballistic	7XØ16	6XØ14	9.3
	凸面 Convex Face	127	260	8	2	球齿+弹头齿 Spherical+Ballistic	8XØ16	4XØ14+3XØ13	10.3
	凸面 Convex Facev	130	260	8	2	球齿+弹头齿 Spherical+Ballistic	8XØ16	4XØ14+3XØ13	10.5
SD5									
	凸面 Convex Face	140	259	8	2	球齿+弹头齿 Spherical+Ballistic	7XØ18	4XØ15+3XØ14	15
	平面 Flat Face	146	259	8	2	球齿+弹头齿 Spherical+Ballistic	8XØ18	8XØ14	15.8
	平面 Flat Face	152	259	8	2	球齿+弹头齿 Spherical+Ballistic	8XØ18	8XØ14	16.1
	凹面 Concave Face	165	259	8	2	球齿 Spherical	8XØ18	4XØ16+4XØ14	18.2
	凹面 Concave Face	178	259	8	2	球齿 Spherical	8XØ18	6XØ16+5XØ14	19.6
SD6									
	凹面 Concave Face	154	322	8	2	球齿 Spherical	8XØ18	4XØ16+4XØ15	25
	平面 Flat Face	165	322	8	2	球齿 Spherical	8XØ18	8XØ16	25.8
	凹面 Concave Face	171	322	8	2	球齿 Spherical	8XØ18	6XØ16+4XØ15	27.3
	凹面 Concave Face	178	322	8	2	球齿 Spherical	8XØ18	6XØ16+5XØ15	28.2
	凹面 Concave Face	190	322	8	3	球齿 Spherical	9XØ18	6XØ16+5XØ15	29.4
	凹面 Concave Face	203	322	8	2	球齿 Spherical	10XØ18	8XØ16+6XØ15	32.5
SD8									
	凹面 Concave Face	203	321	8	2	球齿 Spherical	10XØ18	4XØ18+10XØ16	41.3
	凹面 Concave Face	216	321	8	2	球齿 Spherical	10XØ18	4XØ18+10XØ16	45
	凹面 Concave Face	230	321	8	2	球齿 Spherical	12XØ18	12XØ18+6XØ16	47.8
	凹面 Concave Face	235	321	8	2	球齿 Spherical	12XØ18	12XØ18+6XØ16	48.4
	凹面 Concave Face	254	321	8	2	球齿 Spherical	12XØ18	12XØ18+8XØ16	55.3
	凸凹面 Convex- Concave Face	275	321	8	2	球齿 Spherical	12XØ18	27XØ16	62
	凸凹面 Convex- Concave Face	305	321	8	3	球齿 Spherical	15XØ18	35XØ16	70.5
SD10									
	凸凹面 Convex- Concave Face	254	356	8	2	球齿 Spherical	12XØ19	8XØ18+19XØ16	83.2
	凸凹面 Convex- Concave Face	275	356	8	2	球齿 Spherical	12XØ19	8XØ18+20XØ16	87.7
	凸凹面 Convex- Concave Face	305	356	8	3	球齿 Spherical	15XØ19	27XØ18+8XØ16	97.5
	凸凹面 Convex- Concave Face	325	356	8	3	球齿 Spherical	15XØ19	27XØ18+9XØ16	106
	凸凹面 Convex- Concave Face	350	356	8	4	球齿 Spherical	16XØ19	32XØ18+14XØ16	115.3
	凸凹面 Convex- Concave Face	400	356	8	4	球齿 Spherical	16XØ19	40XØ18+25XØ16	140.7
SD12									
	凸凹面 Convex- Concave Face	305	470	8	3	球齿 Spherical	15XØ20	27XØ18+8XØ16	146.5
	凸凹面 Convex- Concave Face	311	470	8	3	球齿 Spherical	15XØ20	27XØ18+8XØ16	147
	凸凹面 Convex- Concave Face	325	470	8	3	球齿 Spherical	15XØ20	27XØ18+9XØ16	156
	凸凹面 Convex- Concave Face	350	470	8	4	球齿 Spherical	16XØ20	32XØ18+13XØ16	166
	凸凹面 Convex- Concave Face	381	470	8	4	球齿 Spherical	16XØ20	36XØ18+18XØ16	184
	凸凹面 Convex- Concave Face	400	470	8	4	球齿 Spherical	16XØ20	40XØ18+28XØ16	199
	凸凹面 Convex- Concave Face	445	470	8	4	球齿 Spherical	20XØ20	48XØ18+25XØ16	237.5
	凸凹面 Convex- Concave Face	500	470	8	4	球齿 Spherical	24XØ20	90XØ18	293

SP1880+SP330系列钻头/ SP1880 + SP330 Shank Drill Bits

头部规格 Specification / 钻头规格 Specifications	头部形状 Head Shape	钻头头部直径 Head Diameter (mm)	尾柄长度 Shank Length	花键数 Spline	排气孔数量 Port holes	合金数量X直径 Button qty.pcs X dia.mm			重量 Weight (Kg)
						齿型 Button Type (选购件 Optional)	边齿 Gauge Buttons	芯齿 Front buttons	
SP330									
	双边齿凹面 Double guage button Concave Face	450	520	10	4	球齿 Domed	20XØ20	16XØ19+57XØ18	308
	双边齿凹面 Double guage button Concave Face	500	520	10	4	球齿 Domed	24XØ20	16XØ19+73XØ18	354
	双边齿凹面 Double guage button Concave Face	550	520	10	4	球齿 Domed	24XØ20	16XØ19+79XØ18	410
	双边齿凹面 Double guage button Concave Face	600	520	10	4	球齿 Domed	24XØ20	16XØ19+96XØ18	483
SP1880									
	凸凹面 Convex- Concave Face	600	480	16	4	球齿 Domed	24XØ22	72XØ20+32XØ18	636
	双边齿凹面 Double guage button Concave Face	650	480	16	4	球齿 Domed	24XØ22	80XØ20+38XØ18	721
	双边齿凹面 Double guage button Concave Face	700	480	16	5	球齿 Domed	30XØ22	90XØ20+43XØ18	838
	凸凹面 Convex- CVoncave Face	800	480	16	6	球齿 Domed	36XØ22	182XØ19	1152

Middle-Low Air Pressure DTH Button Bits

中低风压潜孔钻头

CIR系列钻头/ CIR Series Drill Bits

钻头规格 Face shape / 头部规格 Button bits face	头部形状 Head Shape	钻头头部直径 Diameter of button face (mm)	尾柄长度 Shank Length	花键数 Spline	排气孔数量 NO.Air Holes	合金数量X直径 Button qty.pcs X dia.mm			重量 Weight (Kg)
						齿型 Button Type (选购件 Optional)	边齿 Gauge Buttons	芯齿 Front buttons	
CIR65									
	平面 Flat Face	65	105	4	2	球齿 Spherical	4XØ12	2XØ12	1.5
	平面 Flat Face	68	105	4	2	球齿 Spherical	4XØ12	2XØ12	1.6
CIR70									
	平面 Flat Face	76	111	4	2	球齿 Spherical	6XØ12	4XØ11	2
	凸面 Convex Face	85	111	4	2	球齿 Spherical	6XØ13	2XØ12+2XØ11	2.3
CIR90									
	凸面 Convex Face	90	130	6	2	球齿 Spherical	6XØ14	2XØ13+2XØ12	3.75
	凹面 Concave Face	110	130	6	2	弹头齿 Ballistic	6XØ14	6XØ13	4.8
CIR110									
	凹面 Concave Face	110	140	6	2	弹头齿 Ballistic	6XØ14	6XØ13	6.2
	凹面 Concave Face	130	140	6	2	弹头齿 Ballistic	8XØ14	4XØ14+3XØ13	8.05
	平面 Flat Face	140	140	6	2	弹头齿 Ballistic	8XØ14	8XØ14	9
CIR150									
	凸面 Convex Face	155	170	6	3	弹头齿 Ballistic	9XØ16	10XØ14	16.7
	凸面 Convex Face	165	170	6	3	弹头齿 Ballistic	9XØ16	10XØ14	17.55
	凸面 Convex Face	178	170	6	3	弹头齿 Ballistic	9XØ16	6XØ16+6XØ14	18.85
CIR170									
	凸面 Convex Face	195	170	6	3	弹头齿 Ballistic	9XØ16	6XØ16+8XØ14	24.2
	凸面 Convex Face	203	170	6	3	弹头齿 Ballistic	9XØ16	6XØ16+10XØ14	26.35
N3									
	凸面 Convex Face	90	130	6	2	弹头齿 Ballistic	6XØ14	2XØ13+2XØ12	3.55
	凹面 Concave Face	110	130	6	2	弹头齿 Ballistic	6XØ14	6XØ13	4.6
N4									
	凹面 Concave Face	110	140	6	2	弹头齿 Ballistic	6XØ14	6XØ13	6
	凹面 Concave Face	130	140	6	2	弹头齿 Ballistic	8XØ14	4XØ14+3XØ13	7.85
	平面 Flat Face	140	140	6	2	弹头齿 Ballistic	8XØ14	8XØ14	8.8

BR系列钻头/ BR Series Drill Bits

钻头规格 Face shape / 头部规格 Button bits face	头部形状 Head Shape	钻头头部直径 Diameter of button face (mm)	尾柄长度 Shank Length	花键数 Spline	排气孔数量 Port holes	合金数量X直径 Button qty.pcs X dia.mm			重量 Weight (Kg)
						齿型 Button Type (选购件 Optional)	边齿 Gauge Buttons	芯齿 Front buttons	
BR1									
	平面 Flat Face	64	163	6	2	弹头齿 Ballistic	6XØ10	4XØ9	1.8
	凸面 Convex Face	70	163	6	2	弹头齿 Ballistic	6XØ11	4XØ10	2
BR2									
	平面 Flat Face	76	165	6	2	弹头齿 Ballistic	6XØ14	4XØ11	2.7
	平面 Flat Face	80	165	6	2	弹头齿 Ballistic	6XØ14	4XØ11	2.8
	平面 Flat Face	85	165	6	2	弹头齿 Ballistic	6XØ14	4XØ12	3
	平面 Flat Face	90	165	6	2	弹头齿 Ballistic	6XØ14	4XØ12	3.1
BR3									
	平面 Flat Face	90	165	6	2	球齿+弹头齿 Spherical+Ballistic	6XØ14	5XØ12	4.1
	平面 Flat Face	95	165	6	2	球齿+弹头齿 Spherical+Ballistic	6XØ14	5XØ12	4.3
	平面 Flat Face	100	165	6	2	球齿+弹头齿 Spherical+Ballistic	6XØ14	6XØ12	4.5
	平面 Flat Face	108	165	6	2	球齿+弹头齿 Spherical+Ballistic	8XØ13	6XØ12	4.8

Hole Opener Bit Design

潜孔扩孔钻头

扩孔钻头示意图
3D-Effect Drawing Of Hole Opener Bit

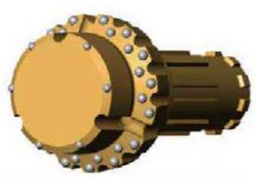
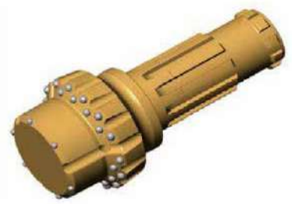

扩孔钻头规格/Reaming Bit 's

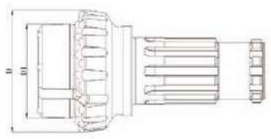

头部规格 Specification / 钻头规格 Specifications	具体尺寸 Specific Detailed Size											
D(mm)	165	178	190	216	254	305	305	381	381	445	482	600
D1(mm)	82	99	115	138	159	208	208	296	296	305	311	445
边齿	16	16	18	18	18	18	20	20	20	20	22	22
中齿	14	14	15	15	16	16	18	18	18	18	19	19
可配尾柄	ND45A SP480 Mission40		ND55A SP580 Mission50		ND65A SP680 Mission60		SP880A SP882/SP883 Mission80		SP1080/SP1081 SD10		SP1280/SD12/ QL120	

备注:扩孔钻头的导向尺寸与扩孔尺寸，合金大小，可根据客户要求设计。

3-Wings DTH Bit

潜孔三翼钻头

三翼钻头规格/3-Wings DTH Bit's

头部规格 Specification / 钻头规格 Specifications	钻头头部直径 Head Diameter (mm)	排气孔数量 Port Holes	合金数量X直径 Button qty.pcs X dia.mm		
			齿型 Button Type (选购件 Optional)	边齿 Gauge Buttons	芯齿 Front Buttons
	130	3	弹头齿 Ballistic	9×Ø14	3×Ø13
	140	3	弹头齿 Ballistic	9×Ø14	3×Ø14
	150	3	弹头齿 Ballistic	9×Ø14	3×Ø14
	152	3	弹头齿 Ballistic	9×Ø15	3×Ø15
	165	3	弹头齿 Ballistic	9×Ø15	3×Ø15
	180	3	弹头齿 Ballistic	9×Ø15	3×Ø15
	180	3	弹头齿 Ballistic	9×Ø16	3×Ø15
	190	3	弹头齿 Ballistic	9×Ø16	4×Ø15
	203	3	弹头齿 Ballistic	9×Ø16	4×Ø15
	219	3	弹头齿 Ballistic	12×Ø16	4×Ø15
	254	3	弹头齿 Ballistic	15×Ø16	4×Ø15

备注:三翼钻头同规格的头部布齿一样，只是钻头尾柄不一样.

03

CASING SYSTEM

Casing System

Drilling casing systems for challenging ground conditions.

RELIABILITY
Durable materials and rigorous quality control

EFFICIENCY
Optimized solutions for high productivity

PRECISION
Engineered for accurate casing installation

GLOBAL STANDARD
Compliant with API and international standards

Eccentric Casing System

偏心扩孔钻具

零件表面的硬化处理
Hardening treatment of the part's surface

具有较长的使用寿命和优异的抗磨性能。
with longer operating life and excellent anti-wear properties.

优越性能
Superior performance

性能稳定可靠，钻进速度快。
Stable and reliable performance，high drilling speed

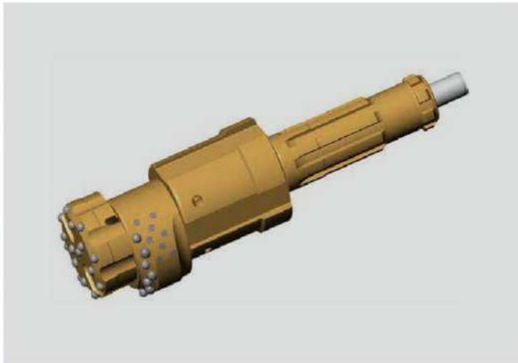

Working Principle of Drill

钻具工作原理

01 凿岩工作开始时，偏心扩孔套沿偏心导向钻头旋出，同时开始扩孔以保证套管和钻进系统同时前进。

When starting drilling, the reamer swings out and reams the pilot-hole wide enough for the casing tube to slide down behind the drill bit assembly.

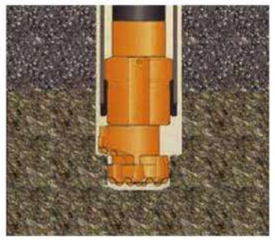

02 跟管钻进到位后，小心地反转，偏心扩孔套旋回，并将偏心钻具系统从套管中拔出。

When the required depth is reached, rotation is reversed carefully, whereupon the reamer swings in. Allowing the drill bit assembly to be pulled up through the casing

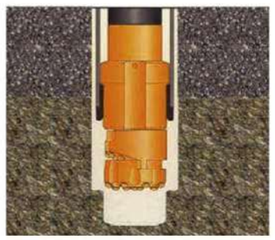

03 套管向上拔，同时在孔底喷灌砼浆或其它填充物。

Casing tubes that are to be left in the drill hole should be sealed at the bottom of the hole by means if cement grout or some other sealing agent.

04 在基岩中采用常规钻具钻进以达到所需深度。

Drilling continues to the desired depth in the bedrock using a conventional drill string.

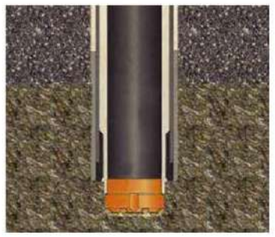

偏心扩孔钻具规格/ODEX Casing System/Eccentric Overburden Casing System

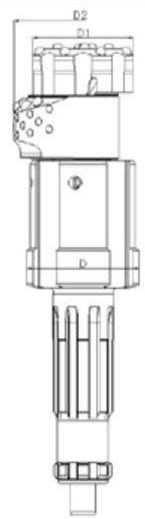

规格型号 Model	套管外径(mm) Casing Tube O.D	稳杆器最大外径D (mm) Maximum O.D. of Guide Device	钻头含齿直径D1(mm) Bit Diameter(Button Included)	管靴内径(mm) Casing Shoe I.D.	扩孔最大直径D2 (mm) Maximum Reaming O.D.	所配冲击器规格 Hammer Style
108偏心钻具	¢108	¢92	¢84	¢86	¢118	3寸
114偏心钻具	¢114	¢100	¢92	¢94	¢124	3寸
127偏心钻具	¢127	¢110	¢100	¢102	¢136	3～4寸
146偏心钻具	¢146	¢124	¢115	¢117	¢156	4寸
168偏心钻具	¢168	¢146	¢134	¢138	¢178	5寸
178偏心钻具	¢178	¢156	¢144	¢148	¢193	5寸
183偏心钻具	¢183	¢160	¢144	¢152	¢193	5寸
194偏心钻具	¢194	¢178	¢165	¢167	¢208	6寸
219偏心钻具	¢219	¢203	¢189	¢193	¢237	6～7寸
245偏心钻具	¢245	¢220	¢206	¢210	¢260	6～8寸
273偏心钻具	¢273	¢256	¢238	¢242	¢308	8寸
325偏心钻具	¢325	¢297	¢280	¢285	¢355	8～10寸
377偏心钻具	¢377	¢351	¢328	¢333	¢420	10～12寸

备注:以上尺寸为厂标设计尺寸,客户套管壁厚如有不同需特殊设计.

Concentric Casing System

同心跟管钻具

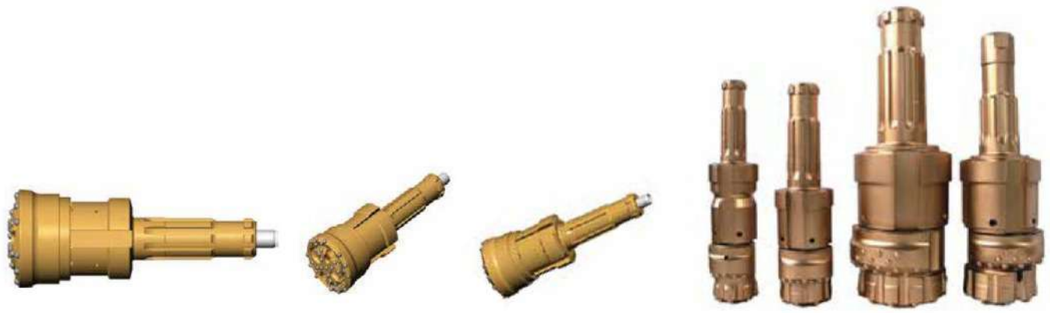

Working Principle of Drill

钻具工作原理

01 钻孔之前，将环形钻头和管靴组件与套管焊好，然后将导向钻头与环形钻头管靴组件锁好，导向钻头肩部与管靴啮合。

Ring bit and casing shoe assembly is welded to casing prior to drilling. Lock the assembly into pilot bit with hammer. The pilot bit' shoulder engages the shoulder of the casing shoe.

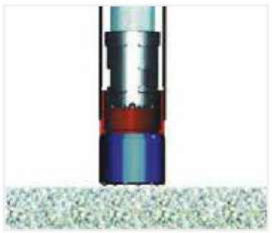

02 冲击器的冲击能传至导向钻头和环形钻头开始破岩，部分能量带动套管向前。

Hammer's percussive energy is transferred through the pilot and ring bit, crushing rock. Part of impact energy advances casing.

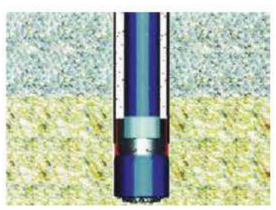

03 在钻进结束之后，通过轻轻反转让卡口连接解锁而取回钻具。环形钻头留在孔内，当孔进行注浆完毕，套管拔出时，环形钻头一起取出。

On completion of drilling and casing, the drill string wit pilot bit is retrieved by a slight reverse rotation to unlock the bayonet coupling. The ring bit stays in the hole, and can be recovered only if the casing is retrieved.v

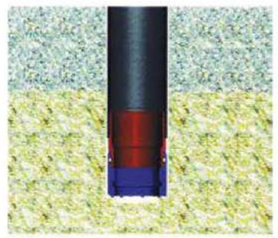

04 在基岩中，如果需要进一步钻进，将导向钻头换成尺寸合适的标准钻头。

If further drilling is required on the bedrock, the pilot bit is simply replaced by an appropriate size of standard DTH bit.

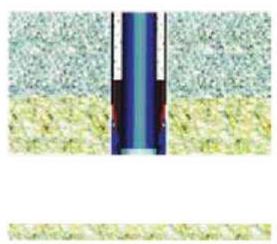

Advantages of Concentric Drilling

同心跟管钻具优势

01 **成孔直线度好，钻进速度快。**

对心钻进的工作原理能保证在砾石层、砂层和卵石层等所有地层中钻出较直的孔，并且钻进速度快。

02 **钻进中扭矩较小。**

对心钻进比偏心钻进需要的扭矩小得多。环形钻头保证在所有条件下顺利稳定地钻进，即使用小钻机也能钻较大的孔。

03 **解锁-重新锁定比较容易。**

钻孔过程中有时需要将系统解锁，对心钻进容易重新锁定，因为该系统中没有必须在孔内打开和关闭的偏心构件。

04 **可以进行任何角度的钻孔。**

对心钻具能钻任何角度的孔。

05 **排渣效果好。**

对心钻进中用于排渣的气流从导向钻头喷出后立即沿套管上升，因此，对孔壁损害较小，排渣效果好。

06 **操作容易，系统安全。**

由于对心钻进工作较顺利，钻孔工人不需要持续关注钻进工作。

07 **经济，成本低。**

对心钻进系统的结构和工作原理能保证显著减少停机时间，消耗品少，运转成本低。

01 **Drilling Straight and fast**

Theoretically,Concentric drilling makes sure the hole in all formations such as gravel bed,sand bed and pebble bed etc.is considerably straight,the drilling speed fast and the drilling torque relatively small.

02 **The torque for Concentric drilling is much less than for eccentric dirlling.**

A smooth and steady drilling may be achieved using ring bit on all conditions and create big hole even if a small drilling rig is used.

03 **Easily Unlocking-relocking**

Unlocking the system is sometimes required during process.Relocking is easy since there are no eccentric components that must be opened or closed inside the hole.

04 **Drilling in any angle.**

Concentric drilling system can drill the hole at any angle.

05 **Effective cuttings discharge.**

The airflow for cutting discharge purpose during the Concentric drilling will instantly ascend along the casing pipe after spurting out from the pilot bit.Hence,the negligible damage on the wall of hole can guarantee effective cutting discharge.

06 **Easy-to-operate and system security**

Drilling workers are relieved of the need to maintain their continuous and constant attention on drilling process since Concentric drilling can carry on smoothly.

07 **Economical and cost-effective.**

The structure and principle of operation of Concentric drilling system can guarantee considerable reduction in downtime,fewer consumable and lower operation costs.

同心跟管钻具规格/Concentric Casing System

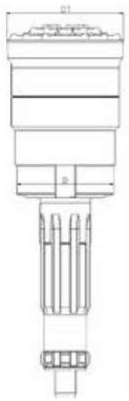

规格型号 Model	套管外径(mm) Casing Tube O.D	中心钻头最大外径D(mm) Bit Diameter(Button Included)	管靴内径(mm) Casing Shoe I.D.	扩孔最大尺寸(mm) Maximum Reaming O.D.	所配冲击器规格 Hammer Style
146同心钻具 Concentric Casing	¢146	¢123.5	¢116	¢156	4寸
168同心钻具 Concentric Casing	¢168	¢146	¢140	¢184	5寸
178同心钻具 Concentric Casing	¢178	¢157	¢150	¢194	5寸
183同心钻具 Concentric Casing	¢183	¢160	¢152	¢198	5寸
194同心钻具 Concentric Casing	¢194	¢178	¢164	¢208	6寸
219同心钻具 Concentric Casing	¢219	¢203	¢192	¢234	6~7寸
245同心钻具 Concentric Casing	¢245	¢217	¢205	¢260	6~8寸
273同心钻具 Concentric Casing	¢273	¢246	¢233	¢291	8寸
325同心钻具 Concentric Casing	¢325	¢297	¢282	¢340	8~10寸
377同心钻具 Concentric Casing	¢377	¢351	¢332	¢405	10~12寸

备注:以上尺寸为厂标设计尺寸,客户套管壁厚如有不同需特殊设计.

Slide Block Casing System

滑块式跟管钻具

滑块式跟管钻具规格/Slide Block Casing System

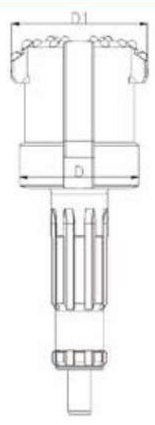

规格型号 Model	套管外径(mm) Casing OD	中心钻头 最大外径D(mm) Maximum OD of Center Bit	管靴内径(mm) Casing Shoe ID	扩孔最大尺寸(mm) Maximum OD of Reaming	所配冲击器规格 Hammer Type
146滑块钻具 Slide Block Casing	¢146	¢123	¢115	¢156	4寸
168滑块钻具 Slide Block Casing	¢168	¢146	¢140	¢185	5寸
178滑块钻具 Slide Block Casing	¢178	¢156	¢150	¢193	5寸
183滑块钻具 Slide Block Casing	¢183	¢160	¢154	¢193	5寸
194滑块钻具 Slide Block Casing	¢194	¢178	¢166	¢211	6寸
219滑块钻具 Slide Block Casing	¢219	¢203	¢193	¢237	6~7寸
245滑块钻具 Slide Block Casing	¢245	¢220	¢210	¢260	6~8寸
273滑块钻具 Slide Block Casing	¢273	¢251	¢241	¢308	8寸
325滑块钻具 Slide Block Casing	¢325	¢298	¢281	¢378	8~10寸
377滑块钻具 Slide Block Casing	¢377	¢350	¢335	¢430	10~12寸
406滑块钻具 Slide Block Casing	¢406	¢380	¢363	¢426	12寸
560滑块钻具 Slide Block Casing	¢560	¢530	¢511	¢590	18寸
610滑块钻具 Slide Block Casing	¢610	¢582	¢556	¢640	18寸

备注:以上尺寸为厂标设计尺寸,客户套管壁厚如有不同需特殊设计.

Overburden Wing Bit

旋翼式跟管钻具

旋翼式跟管钻具规格/Overburden Wing Bit

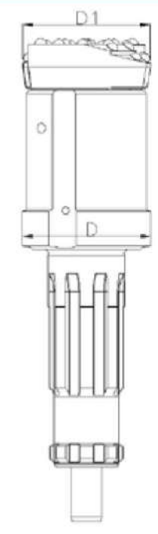

规格型号 Model	套管外径(mm) Casing OD	中心钻头 最大外径D(mm) Maximum OD of Center Bit	管靴内径(mm) Casing Shoe ID	扩孔最大尺寸(mm) Maximum OD of Reaming	所配冲击器规格 Hammer Type
146旋翼钻具 Overburden Wing Bit	¢146	¢123	¢115	¢156	4寸
168旋翼钻具 Overburden Wing Bit	¢168	¢146	¢136	¢184	5寸
178旋翼钻具 Overburden Wing Bit	¢178	¢156	¢142	¢193	5寸
183旋翼钻具 Overburden Wing Bit	¢183	¢160	¢146	¢198	5寸
194旋翼钻具 Overburden Wing Bit	¢194	¢178	¢162	¢208	6寸
219旋翼钻具 Overburden Wing Bit	¢219	¢203	¢180	¢234	6~7寸
245旋翼钻具 Overburden Wing Bit	¢245	¢220	¢202	¢260	6~8寸
273旋翼钻具 Overburden Wing Bit	¢273	¢251	¢237	¢300	8寸
325旋翼钻具 Overburden Wing Bit	¢325	¢298	¢280	¢355	8~10寸
377旋翼钻具 Overburden Wing Bit	¢377	¢350	¢330	¢407	10~12寸

备注:以上尺寸为厂标设计尺寸,客户套管壁厚如有不同需特殊设计.

Drilling Equipment

管靴与跟管产品

焊接管靴示意图
Weldable Casing Shoe/ Weldable Crown

螺纹管靴示意图
Threaded Casing Shoe/ Threaded Crown

跟管示意图
Casing Tube

INDUSTRIAL AND
ENGINEERING TECHNOLOGY
Co., Limited

04

TOP HAMMER DRILL BIT

High performance top hammer drill bits designed for superior penetration and longer service life.

DURABILITY
Premium steel and advanced heat treatment for extended life

HIGH PENETRATION
Optimized button design for maximum impact energy

RELIABILITY
Consistent quality in demanding drilling conditions

GLOBAL SOLUTIONS
Engineered for mining, quarrying and construction applications

Top Hammer Drill Bit

顶锤钻头

导向系列钻头/ Retrac Button Bi t

R32

头部规格 Specification / 钻头规格 Specifications	头部形状 Head Shape	钻头头部直径 Head Diameter (mm)	钎头长度 (不含合金) Length (without Button)	水孔数量 Holes: 面水孔 Port Holes	水孔数量 Holes: 边水孔 Side Holes	合金数量X直径 Button qty pcs X dia.mm: 齿型 Button Type (可选 Optional)	合金数量X直径: 边齿 Gauge Buttons	合金数量X直径: 芯齿 Front buttons	重量 Weight (Kg)
	平面 Flat Face	51	130	3	/	球齿+球齿 Domed+Domed	6-¢10	3-¢9	1.25
	平面 Flat Face	57	130	3	/	弹头齿 Ballistic	6-¢10	3-¢9	1.65

R38

头部规格 Specification / 钻头规格 Specifications	头部形状 Head Shape	钻头头部直径 Head Diameter (mm)	钎头长度 (不含合金) Length (without Button)	水孔数量 Holes: 面水孔 Port Holes	水孔数量 Holes: 边水孔 Side Holes	合金数量X直径 Button qty pcs X dia.mm: 齿型 Button Type (可选 Optional)	合金数量X直径: 边齿 Gauge Buttons	合金数量X直径: 芯齿 Front buttons	重量 Weight (Kg)
	平面 Flat Face	64	140	3	/	球齿+弹头齿 Domed+Ballistic	6XØ11	3-¢9	2.05
	中心下陷 Center Drop Face	76	160	4	/	球齿+球齿 Domed+Domed	8-¢11	5-¢11	3.65
	中心下陷 Center Drop Face	89	170	4	/	球齿+球齿 Domed+Domed	8-¢12	4-¢12+2-¢10	5.3

T38

头部规格 Specification / 钻头规格 Specifications	头部形状 Head Shape	钻头头部直径 Head Diameter (mm)	钎头长度 (不含合金) Length (without Button)	水孔数量 Holes: 面水孔 Port Holes	水孔数量 Holes: 边水孔 Side Holes	合金数量X直径 Button qty pcs X dia.mm: 齿型 Button Type (可选 Optional)	合金数量X直径: 边齿 Gauge Buttons	合金数量X直径: 芯齿 Front buttons	重量 Weight (Kg)
	中心下陷 Center Drop Face	64	160	2	/	球齿+球齿 Domed+Domed	8-¢9	5-¢9	2.45
	平面 Flat Face	70	160	3	/	球齿+球齿 Domed+Domed	6-¢11	4-¢9	2.85
	中心下陷 Center Drop Face	76	160	4	/	球齿+球齿 Domed+Domed	8-¢11	5-¢11	3.7
	中心下陷 Center Drop Face	89	170	4	/	抛物线+抛物线 Parabola+Parabola	8-¢12	4-¢12+2-¢10	5.3

T45

头部规格 Specification / 钻头规格 Specifications	头部形状 Head Shape	钻头头部直径 Head Diameter (mm)	钎头长度 (不含合金) Length (without Button)	水孔数量 Holes: 面水孔 Port Holes	水孔数量 Holes: 边水孔 Side Holes	合金数量X直径 Button qty pcs X dia.mm: 齿型 Button Type (可选 Optional)	合金数量X直径: 边齿 Gauge Buttons	合金数量X直径: 芯齿 Front buttons	重量 Weight (Kg)
	中心下陷 Center Drop Face	72	160	4	/	球齿+球齿 Domed+Domed	8-¢11	5-¢10	3.15
	中心下陷 Center Drop Face	76	160	4	/	球齿+球齿 Domed+Domed	8-¢12	4-¢11+1-¢10	3.55
	中心下陷 Center Drop Face	89	170	4	/	弹头齿+弹头齿 Ballistic+Ballistic	8-¢12	4-¢12+2-¢10	5
	中心下陷 Center Drop Face	102	180	4	/	球齿+球齿 Domed+Domed	8-¢13	6-¢12	7.3

T51

头部规格 Specification / 钻头规格 Specifications	头部形状 Head Shape	钻头头部直径 Head Diameter (mm)	钎头长度 (不含合金) Length (without Button)	水孔数量 Holes: 面水孔 Port Holes	水孔数量 Holes: 边水孔 Side Holes	合金数量X直径 Button qty pcs X dia.mm: 齿型 Button Type (可选 Optional)	合金数量X直径: 边齿 Gauge Buttons	合金数量X直径: 芯齿 Front buttons	重量 Weight (Kg)
	中心下陷 Center Drop Face	89	170	4	/	弹头齿+弹头齿 Ballistic+Ballistic	8-¢12	4-¢12+2-¢11	5
	中心下陷 Center Drop Face	102	180	4	/	弹头齿+弹头齿 Ballistic+Ballistic	8-¢13	4-¢13+2-¢12	7.12
	平面 Flat Face	115	185	2	2	球齿+球齿 Domed+Domed	8-¢14	6-¢13	10.1
	中心下陷 Center Drop Face	127	185	4	/	球齿+球齿 Domed+Domed	8-¢14	4-¢14+3-¢13	12.4

ST58

头部规格 Specification / 钻头规格 Specifications	头部形状 Head Shape	钻头头部直径 Head Diameter (mm)	钎头长度 (不含合金) Length (without Button)	水孔数量 Holes: 面水孔 Port Holes	水孔数量 Holes: 边水孔 Side Holes	合金数量X直径 Button qty pcs X dia.mm: 齿型 Button Type (可选 Optional)	合金数量X直径: 边齿 Gauge Buttons	合金数量X直径: 芯齿 Front buttons	重量 Weight (Kg)
	平面 Flat Face	102	180	3	/	抛物线+抛物线 Parabola+Parabola	9-¢13	6-¢12	6.5
	平面 Flat Face	115	185	2	2	球齿+球齿 Domed+Domed	8-¢14	6-¢13	9.5
	中心下陷 Center Drop Face	127	185	4	/	球齿+球齿 Domed+Domed	8-¢14	4-¢14+3-¢13	11.7

GT60山特维克款

头部规格 Specification / 钻头规格 Specifications	头部形状 Head Shape	钻头头部直径 Head Diameter (mm)	钎头长度 (不含合金) Length (without Button)	水孔数量 Holes: 面水孔 Port Holes	水孔数量 Holes: 边水孔 Side Holes	合金数量X直径 Button qty pcs X dia.mm: 齿型 Button Type (可选 Optional)	合金数量X直径: 边齿 Gauge Buttons	合金数量X直径: 芯齿 Front buttons	重量 Weight (Kg)
	平面三角形 Flat Triangle Face	102	212	3	/	球齿+球齿 Domed+Domed	9-¢13	9-¢11	10
	平面三角形 Flat Triangle Face	115	212	3	/	球齿+球齿 Domed+Domed	9-¢14	10-¢12	8
	平面三角形 Flat Triangle Face	127	212	3	/	球齿+球齿 Domed+Domed	9-¢16	10-¢14	13.9
	平面三角形 Flat Triangle Face	140	225	3	/	球齿+球齿 Domed+Domed	9-¢16	10-¢14	17.4

导向系列钻头/Retrac Button Bi t

EL60款

头部规格 Specification / 钻头规格 Specifications	头部形状 Head Shape	钻头头部直径 Head Diameter (mm)	钎头长度 (不含合金) Length (without Button)	水孔数量 Holes: 面水孔 Port Holes	水孔数量 Holes: 边水孔 Side Holes	合金数量X直径 Button qty pcs X dia.mm: 齿型 Button Type (可选 Optional)	合金数量X直径: 边齿 Gauge Buttons	合金数量X直径: 芯齿 Front buttons	重量 Weight (Kg)
	中心下陷 Center Drop Face	102	200	3	/	球齿+球齿 Domed+Domed	9-¢14	7-¢13	6.5
	中心下陷 Center Drop Face	115	200	4	/	球齿+球齿 Domed+Domed	8-¢14	4-¢14+2-¢13	9
	中心下陷 Center Drop Face	127	205	4	/	球齿+球齿 Domed+Domed	8-¢14	4-¢14+3-¢13	12

ST68

头部规格 Specification / 钻头规格 Specifications	头部形状 Head Shape	钻头头部直径 Head Diameter (mm)	钎头长度 (不含合金) Length (without Button)	水孔数量 Holes: 面水孔 Port Holes	水孔数量 Holes: 边水孔 Side Holes	合金数量X直径 Button qty pcs X dia.mm: 齿型 Button Type (可选 Optional)	合金数量X直径: 边齿 Gauge Buttons	合金数量X直径: 芯齿 Front buttons	重量 Weight (Kg)
	中心下陷 Center Drop Face	102	185	4	/	球齿+球齿 Domed+Domed	8-¢14	4-¢13+2-¢12	6.1
	中心下陷 Center Drop Face	115	185	4	/	球齿+球齿 Domed+Domed	8-¢14	4-¢14+2-¢13	8.4
	中心下陷 Center Drop Face	127	190	4	/	球齿+球齿 Domed+Domed	8-¢14	4-¢14+3-¢13	11.4
	中心下陷 Center Drop Face	140	190	4	/	球齿+球齿 Domed+Domed	8-¢16	4-¢14+3-¢13	14.3

T45 山特维克款

头部规格 Specification / 钻头规格 Specifications	头部形状 Head Shape	钻头头部直径 Head Diameter (mm)	钎头长度 (不含合金) Length (without Button)	水孔数量 Holes: 面水孔 Port Holes	水孔数量 Holes: 边水孔 Side Holes	合金数量X直径 Button qty pcs X dia.mm: 齿型 Button Type (可选 Optional)	合金数量X直径: 边齿 Gauge Buttons	合金数量X直径: 芯齿 Front buttons	重量 Weight (Kg)
	梅花槽 Triangle Face	89	170	4	/	球齿+球齿 Domed+Domed	8-¢13	5-¢13	5
	平面三角形 Flat Triangle Face	102	175	3	/	球齿+球齿 Domed+Domed	9-¢13	9-¢11	7.25
	平面三角形 Flat Triangle Face	115	175	3	/	球齿+球齿 Domed+Domed	9-¢14	10-¢12	9.5

T51 山特维克款

头部规格 Specification / 钻头规格 Specifications	头部形状 Head Shape	钻头头部直径 Head Diameter (mm)	钎头长度 (不含合金) Length (without Button)	水孔数量 Holes: 面水孔 Port Holes	水孔数量 Holes: 边水孔 Side Holes	合金数量X直径 Button qty pcs X dia.mm: 齿型 Button Type (可选 Optional)	合金数量X直径: 边齿 Gauge Buttons	合金数量X直径: 芯齿 Front buttons	重量 Weight (Kg)
	平面三角形 Flat Triangle Face	102	185	3	/	球齿+球齿 Domed+Domed	9-¢13	9-¢11	7.5
	平面三角形 Flat Triangle Face	115	185	3	/	球齿+球齿 Domed+Domed	9-¢14	10-¢12	10
	平面三角形 Flat Triangle Face	127	185	3	/	球齿+球齿 Domed+Domed	9-¢14	10-¢13	12.8

螺纹系列钻头/Normal Button Bit

钻头规格 Specifications \ 头部规格 Specification	头部形状 Head Shape	钻头头部直径 Head Diameter (mm)	钎头长度 (不含合金) Length (without Button)	水孔数量 Holes		合金数量X直径 Button qty pcs X dia.mm			重量 Weight (Kg)
				面水孔 Port Holes	边水孔 Side Holes	齿型 Button Type (可选 Optional)	边齿 Gauge Buttons	芯齿 Front buttons	
R25									
	平面 Flat Face	38	105	1	2	弹头齿 Ballistic	5-¢8	2-¢8	0.5
	平面 Flat Face	45	110	3	2	弹头齿 Ballistic	6-¢9	3-¢8	0.65
R32									
	平面 Flat Face	45	113	3	2	弹头齿 Ballistic	6-¢9	3-¢8	0.75
	平面 Flat Face	64	130	2	/	球齿 Domed	6-¢10	4-¢9	2.1
	凸面 Convex Face	76	130	2	/	球齿 Domed	6-¢12	2¢12+2-¢10	2.7
R38									
	中心下陷 Center Dr¢p Face	64	130	3	/	球齿+弹头齿 Domed+Ballistic	6XØ11	3-¢9	1.85
	中心下陷 Center Drop Face	76	130	2	2	球齿+球齿 Domed+Domed	8-¢12	4-¢12	2.45
	中心下陷 Center Drop Face	89	130	2	2	球齿+球齿 Domed+Domed	8-¢12	6-¢12	3.5
T38									
	中心下陷 Center Drop Face	64	130	2	/	球齿+球齿 Domed+Domed	8-¢9	5-¢9	1.85
	平面 Flat Face	70	130	3	2	球齿+球齿 Domed+Domed	6-¢12	4-¢10	2.05
	中心下陷 Center Drop Face	76	130	4	/	球齿+球齿 Domed+Domed	8-¢11	5-¢10	2.55
	中心下陷 Center Drop Face	89	130	4	/	抛物线+抛物线 Parabola+Parabola	8-¢12	4-¢12+2-¢10	3.55
T45									
	中心下陷 Center Drop Face	72	140	4	/	球齿+球齿 Domed+Domed	8-¢11	5-¢10	2.25
	中心下陷 Center Drop Face	76	140	4	/	球齿+球齿 Domed+Domed	8-¢11	4-¢11+1-¢10	2.9
	中心下陷 Center Drop Face	89	145	4	/	弹头齿+弹头齿 Ballistic+Ballistic	8-¢12	4-¢12+2-¢10	3.8
	中心下陷 Center Drop Face	102	150	4	/	球齿+球齿 Domed+Domed	8-¢13	6-¢12	4.8
T51									
	中心下陷 Center Drop Face	89	155	4	/	弹头齿+弹头齿 Ballistic+Ballistic	8-¢12	4-¢12+2-¢11	4.15
	中心下陷 Center Drop Face	102	155	4	/	弹头齿+弹头齿 Ballistic+Ballistic	8-¢14	4-¢13+2-¢12	5.8
	平面 Flat Face	115	160	2	2	球齿+球齿 Domed+Domed	8-¢14	6-¢13	6.55
	中心下陷 Center Drop Face	127	165	4	/	球齿+球齿 Domed+Domed	8-¢14	4-¢14+3-¢13	7.7
ST58									
	中心下陷 Center Drop Face	89	175	4	/	弹头齿+弹头齿 Ballistic+Ballistic	8-¢12	4-¢12+2-¢11	4.4
	平面 Flat Face	102	180	3	/	抛物线+抛物线 Parabola+Parabola	9-¢13	6-¢12	5.8
	平面 Flat Face	115	185	2	2	球齿+球齿 Domed+Domed	8-¢14	6-¢13	7.7
	中心下陷 Center Drop Face	127	185	4	/	球齿+球齿 Domed+Domed	8-¢14	4-¢14+3-¢13	8.9
GT60山特维克款									
	平面三角形 Flat Triangle Face	102	220	3	/	球齿+球齿 Domed+Domed	9-¢13	9-¢11	8.1
	平面三角形 Flat Triangle Face	115	220	3	/	球齿+球齿 Domed+Domed	9-¢14	10-¢12	8.8
	平面三角形 Flat Triangle Face	127	225	3	/	球齿+球齿 Domed+Domed	9-¢16	10-¢14	10.6
	平面三角形 Flat Triangle Face	140	230	3	/	球齿+球齿 Domed+Domed	9-¢16	10-¢14	11.7

螺纹系列钻头/Normal Button Bit

钻头规格 Specifications \ 头部规格 Specification	头部形状 Head Shape	钻头头部直径 Head Diameter (mm)	钎头长度 (不含合金) Length (without Button)	水孔数量 Holes		合金数量X直径 Button qty pcs X dia.mm			重量 Weight (Kg)
				面水孔 Port Holes	边水孔 Side Holes	齿型 Button Type (可选 Optional)	边齿 Gauge Buttons	芯齿 Front buttons	
ST68									
	平面 Flat Face	102	180	2	2	球齿+球齿 Domed+Domed	8-¢14	6¢13	5.4
	中心下陷 Center Drop Face	115	180	4	/	球齿+球齿 Domed+Domed	8-¢14	4-¢14+2-¢13	6.65
	中心下陷 Center Drop Face	127	190	4	/	球齿+球齿 Domed+Domed	8-¢14	4-¢14+3-¢13	8.9
	中心下陷 Center Drop Face	140	190	4	/	球齿+球齿 Domed+Domed	8-¢16	4-¢14+3-¢13	10.8
T45									
	梅花槽 Triangle Face	89	145	4	/	球齿+球齿 Domed+Domed	8-¢13	5-¢13	3.5
	平面三角形 Flat Triangle Face	102	150	3	/	球齿+球齿 Domed+Domed	9-¢13	9-¢11	4.5
	平面三角形 Flat Triangle Face	115	160	3	/	球齿+球齿 Domed+Domed	9-¢14	10-¢12	5
T51									
	平面三角形 Flat Triangle Face	102	155	3	/	球齿+球齿 Domed+Domed	9-¢13	9-¢11	5.5
	平面三角形 Flat Triangle Face	115	165	3	/	球齿+球齿 Domed+Domed	9-¢14	10-¢12	6.5
	平面三角形 Flat Triangle Face	127	165	3	/	球齿+球齿 Domed+Domed	9-¢14	10-¢13	7.5
EL60									
	平面 Flat Face	102	210	2	2	球齿+球齿 Domed+Domed	8-¢14	6¢13	7.5
	中心下陷 Center Drop Face	115	210	4	/	球齿+球齿 Domed+Domed	8-¢14	4-¢14+2-¢13	8.2
	中心下陷 Center Drop Face	127	220	4	/	球齿+球齿 Domed+Domed	8-¢14	4-¢14+3-¢13	10

Top Hammer Opener Bit

顶锤扩孔钻头

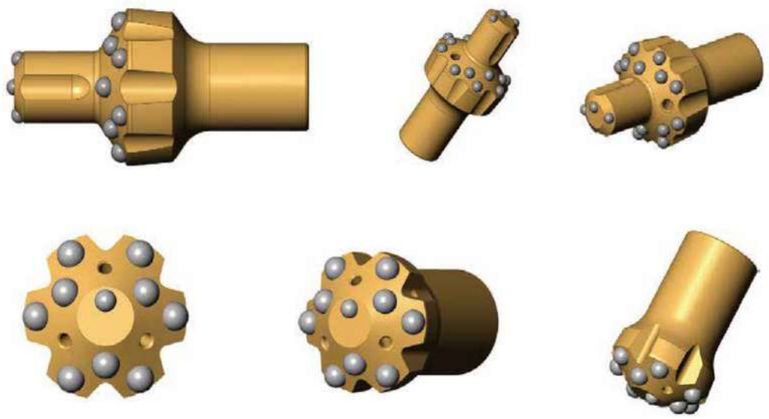

螺纹扩孔钻头规格/ Thread Opener Bits

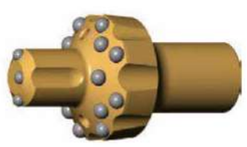

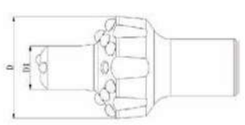

头部规格 Specification / 钻头规格 Specifications	具体尺寸 Specific Detailed Size								
D(mm)	76	89	102	115	102	115	127	140	165
D1(mm)	26	43	43	76	43	76	76	89	102
螺纹规格	R32	R32	R38	R38	T38	T38	T45	T45	T51

备注:扩孔钻头的导向尺寸与扩孔尺寸，合金大小，可根据客户要求设计。

Coupling Sleeves

钎杆连接套

产品材质： 主体采用优质合金钢为原料

工艺： 采用先进的高压煅制生产工艺，真空整体调质热处理。应用数控自动化设备加工成型，保证了稳定可靠的产品质量

用途： 连接钻杆和钻机；连接钻杆与钻杆；连接钻杆与钻头。

Product Material: Alloy Steel

Process: use the most advanced forging process and heat treatment technology with the latest automatedd equipment to ensure quality control.

Use: connecting drill rod and drilling rig; connecting drill rod and drill rod; connecting drill rod and drill bit.

连接套常用规格

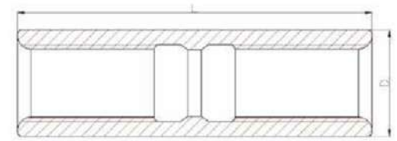

具体尺寸 Specific Detailed Size						
连接套螺纹型号	T38-R32	T38-T38	T38-T45	T38-T51	T45-T45	T51-T51
外径(D) mm	56	56	68	74	68	77
长度(L) mm	170	190	200	210	210	230

备注:连接套的长度/外径尺寸，可根据客户需求定制

Shank Adapter Tubes

钎尾

新金刚为客户提供适配Epiroc（Atlas Copco），Furukawa，Montabert 及 Tamrock 等系列机型的顶锤钎尾。钎尾选用高强度材料，为客户提供更长工作寿命。

New Diamond provides Shank adapters for difters of Epiroc(Atlas Copco), Furukawa, Montabert and Tamrock series. We choose high quality material for shank adapters to provide longer working life.

05

REVERSE CIRCULATION PRODUCT

Reverse Circulation Drill Bits

High efficiency drilling performance with reliable durability.

APPLICATION

Designed for reverse circulation drilling in mineral exploration and water well drilling. Effective in a variety of formations including loose and fractured ground.

ADVANTAGES

- Optimized button layout for enhanced penetration and faster drilling
- Wear-resistant carbide buttons for extended bit life
- Stable performance in abrasive and fractured formations
- High officiency and reduced operating costs

RE004

Ref.	部件 Parts	单重 Weight	件号 Part No	Ref.	部件 Parts	单重 Weight	件号 Part No
01	卡簧 Circlip	0.03 Kg	01-RE004-01	15	内缸 Inner Cylinder	2.5 Kg	08-RE004-15
02	O形圈 "O"Ring	0.02 Kg	01-RE004-02	16	O形圈 "O"Ring	0.02 Kg	08-RE004-16
03	O形圈 "O"Ring	0.02 Kg	01-RE004-03	17	O形圈 "O"Ring	0.02 Kg	08-RE004-17
04	适配管 Adapter Tube	1.0 Kg	01-RE004-04	18	O形圈 "O"Ring	0.02 Kg	08-RE004-18
05	O形圈 "O"Ring	0.02 Kg	01-RE004-05	19	采集管 Sample Tube	2.6 Kg	08-RE004-19
06	O形圈 "O"Ring	0.02 Kg	01-RE004-06	20	活塞 Piston	10.5 Kg	08-RE004-20
07	接头 Top Sub	7.9 Kg	01-RE004-07	21	外缸 Piston Case	18 Kg	08-RE004-21
08	Y形圈 "Y"Ring	0.02 Kg	01-RE004-08	22	衬套 Guided Sleeve	1.8 Kg	08-RE004-22
09	逆止阀 Check Valve	0.5 Kg	01-RE004-09	23	卡环 Retainer Ring	0.3 Kg	08-RE004-23
10	弹簧 Spring	0.1 Kg	01-RE004-10	24	O形圈 "O"Ring	0.02 Kg	08-RE004-24
11	连接管 Sample Tube Upper	1.1 Kg	01-RE004-11	25	卡钎套 Drive Chuck	3.2 Kg	08-RE004-25
12	碟簧 Disc Spring	0.15 Kg	01-RE004-12	26	耐磨套 Shroud	1.1 Kg	08-RE004-26
13	配气座 Valve Seat	2.0 Kg	01-RE004-13	27	钻头 Drill Bit		08-RE004-27
14	O形圈 "O"Ri ng	0.02 Kg	01-RE004-14				

技术参数 / Technical Parameters

总长（不含钻头）Length(Less bit)	总重 Weight	冲击器外径 Outer Diameter	接头螺纹 Connection Thread	钻头钎柄 Bit Shank	钻孔范围 Hole Range
1252mm	53 Kg	¢107mm	4"Remet	RE004	¢112-¢127mm

适用气压 Work Pressure	推荐转速 Recommended rotation speed	耗风量/Air Consumption	
		1.8Mpa	2.4Mpa
1.2-2.5	30~60 r/min	8.5m³/min	12m³/min

RE542

Ref.	部件 Parts	单重 Weight	件号 Part No	Ref.	部件 Parts	单重 Weight	件号 Part No
01	卡簧 Circlip	0.03	08-RE542-01	17	限位轴套 Sample Tube Retainer	0.88	08-RE542-17
02	O形圈 "O" ring	0.02	08-RE542-02	18	O形圈 "O" ring	0.02	08-RE542-18
03	O形圈 "O" ring	0.02	08-RE542-03	19	O形圈 "O" ring	0.02	08-RE542-19
04	适配管 Adapter Tube	2.83	08-RE542-04	20	O形圈 "O" ring	0.02	08-RE542-20
05	O形圈 "O" ring	0.02	08-RE542-05	21	内缸 Inner Cylinder	6.6	08-RE542-21
06	O形圈 "O" ring	0.02	08-RE542-06	22	O形圈 "O" ring	0.02	08-RE542-22
07	接头 Top Sub	9	08-RE542-07	23	活塞 Piston	11.6	08-RE542-23
08	过滤网 Air Screen	0.1	08-RE542-08	24	外缸 Piston Case	13.7	08-RE542-24
09	挡环 Piston Retaining Ring	0.05	08-RE542-09	25	衬套 Guide Sleeve	2.4	08-RE542-25
10	配气座 Air Distributer	0.6	08-RE542-10	26	O形圈 "O" ring	0.02	08-RE542-26
11	O形圈 "O" ring	0.02	08-RE542-11	27	O形圈 "O" ring	0.02	08-RE542-27
12	采集管 Sample Tube	3.1	08-RE542-12	28	挡环 Sleeve Retainer Ring	0.05	08-RE542-28
13	O形圈 "O" ring	0.02	08-RE542-13	29	卡环 Retainer Ring	0.29	08-RE542-29
14	逆止阀 Check Valve	0.4	08-RE542-14	30	O形圈 "O" ring	0.02	08-RE542-30
15	逆止阀橡胶圈 Rubber Ring	0.02	08-RE542-15	31	卡钎套 Chuck Drive	2.85	08-RE542-31
16	逆止阀弹簧 Check Valve Spring	0.1	08-RE542-16	32	耐磨套 Shroud		08-RE542-32

技术参数 / Technical Parameters

总长（不含钻头）Length(Less bit)	总重（不含钻头）Weight(Less bit)	冲击器外径 Outer Diameter	接头螺纹 Connection Thread	可配钻头钎柄 Bit Shank	钻孔范围 Hole Range
1192mm	55Kg	¢110mm	4" Remet螺纹 (可选)	RE542	¢113-¢130mm

适用气压 Work Pressure	推荐转速 Recommended rotation speed	耗风量/Air Consumption	
		1.8Mpa	2.4Mpa
1.2-2.5 Mpa	30~60 r/min	12m³/min	18m³/min

PR52

Ref.	部件 Parts	单重 Weight	件号 Part No	Ref.	部件 Parts	单重 Weight	件号 Part No
01	卡簧 Circlip	0.03 Kg	08-PR52-01	13	内缸 Inner Tube	3 Kg	08-PR52-13
02	O形圈 "O"Ring	0.02 Kg	08-PR52-02	14	活塞 Piston	18 Kg	08-PR52-14
03	O形圈 "O"Ring	0.02 Kg	08-PR52-03	15	外缸 Piston Case	22.5 Kg	08-PR52-15
04	采集管 Sample Tube	7.2 Kg	08-PR52-04	16	O形圈 "O"Ring	0.02 Kg	08-PR52-16
05	过滤筛 Air Screen	0.14 Kg	08-PR52-05	17	O形圈 "O"Ring	0.02 Kg	08-PR52-17
06	接头 Top Sub	13.5 Kg	08-PR52-06	18	衬套 Guided Sleeve	1.9 Kg	08-PR52-18
07	逆止阀 Check Valve	0.6 Kg	08-PR52-07	19	卡环 Retainer Ring	0.3 Kg	08-PR52-19
08	弹簧 Spring	0.1 Kg	08-PR52-08	20	O形圈 "O"Ring	0.02 Kg	08-PR52-20
09	O形圈 "O"Ring	0.02 Kg	08-PR52-09	21	卡钎套 Drive Chuck	4.1 Kg	08-PR52-21
10	O形圈 "O"Ring	0.02 Kg	08-PR52-10	22	耐磨套 Shroud	1.6 Kg	08-PR52-22
11	配气座 Valve Seat	1.4 Kg	08-PR52-11	23	钻头 Drill Bit		08-PR52-23
12	O形圈 "O"Ring	0.02 Kg	08-PR52-12				

技术参数 / Technical Parameters

总长（不含钻头）Length(Less bit)	总重 Weight	冲击器外径 Outer Diameter	接头螺纹 Connection Thread	钻头钎柄 Bit Shank	钻孔范围 Hole Range
1208mm	75.2Kg	¢126mm	4 1/2"Remet	PR52	¢130- ¢146mm

适用气压 Work Pressure	推荐转速 Recommended rotation speed	耗风量/Air Consumption	
		1.8Mpa	2.4Mpa
1.5-3.0 Mpa	30～60 r/min	16m³/min	22m³/min

PR54R

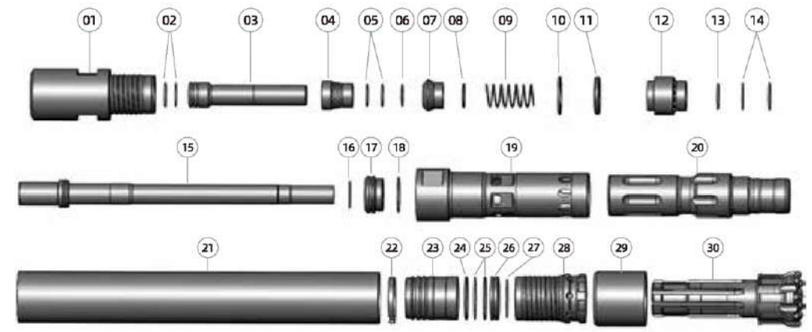

Ref.	部件 Parts	单重 Weight	件号 Part No	Ref.	部件 Parts	单重 Weight	件号 Part No
01	接头 Top Sub	11.5	08-PR54R-01	16	O形圈 "O" ring	0.02	08-PR54R-16
02	O形圈("O" ring) X2	0.02X2	08-PR54R-02	17	限位轴套 Sample Tube Retainer	1	08-PR54R-17
03	联接管 Adapter Tube	2.27	08-PR54R-03	18	O形圈 "O" ring	0.02	08-PR54R-18
04	过滤筛 Air Screen	0.39	08-PR54R-04	19	内缸 Inner Cylinder	8.25	08-PR54R-19
05	O形圈("O" ring) X2	0.02X2	08-PR54R-05	20	活塞 Piston	16.7	08-PR54R-20
06	卡簧 Circlip	0.03	08-PR54R-06	21	外缸 Piston Case	23.5	08-PR54R-21
07	逆止阀 Check Valve	0.4	08-PR54R-07	22	挡环 Piston Retaining Ring	0.1	08-PR54R-22
08	逆止阀胶圈 Rubber Spacer	0.1	08-PR54R-08	23	衬套 Guide Sleeve	2.5	08-PR54R-23
09	逆止阀弹簧 Check Valve Spring	0.1	08-PR54R-09	24	O形圈 "O" ring	0.02	08-PR54R-24
10	垫圈 Gasket	0.1	08-PR54R-10	25	O形圈("O" ring) X2	0.02X2	08-PR54R-25
11	橡胶垫圈 Rubber Spacer	0.1	08-PR54R-11	26	卡环 Retainer Ring	0.4	08-PR54R-26
12	配气座 Air Distributer	1.58	08-PR54R-12	27	O形圈 "O" ring	0.02	08-PR54R-27
13	O形圈 "O" ring	0.02	08-PR54R-13	28	卡钎套 Chuck Drive	4.1	08-PR54R-28
14	O形圈("O" ring) X2	0.02X2	08-PR54R-14	29	耐磨套 Shroud		08-PR54R-29
15	采集管 Shroud	7.43	08-PR54R-15				

技术参数 / Technical Parameters

总长（不含钻头）Length(Less bit)	总重（不含钻头）Weight(Less bit)	冲击器外径 Outer Diameter	接头螺纹 Connection Thread	可配钻头钎柄 Bit Shank	钻孔范围 Hole Range
1294mm	81Kg	¢130mm	4 1/2 "Remet螺纹 (可选)	PR54R	¢135- ¢150mm

适用气压 Work Pressure	推荐转速 Recommended rotation speed	耗风量/Air Consumption	
		1.8Mpa	2.4Mpa
1.5-3.0 Mpa	30～60 r/min	16m³/min	22m³/min

Reverse Circulation Drill Bits

反循环钻头

RE004系列钻头/RE004 Drill Bit

头部规格 Specification / 钻头规格 Specifications	头部形状 Head Shape	钻头头部直径 Head Diameter (mm)	尾柄长度 Shank Length	花键数 Spline	排气孔数量 Port holes	合金数量X直径 Button qty.pcs X dia.mm			重量 Weight (Kg)
						齿型 Button Type (选购件 Optional)	边齿 Gauge Buttons	芯齿 Front buttons	
RE004									
中心下陷 Drop-Center Face		115	271	8	2	球齿 Domed Button	8XØ14	4XØ14+4XØ13	11.5
中心下陷 Drop-Center Face		121	271	8	2	球齿 Domed Button	8XØ14	4XØ14+4XØ13	12.1
中心下陷 Drop-Center Face		124	271	8	2	球齿 Domed Button	8XØ16	4XØ14+2X14	12.3
中心下陷 Drop-Center Face		127	271	8	2	球齿 Domed Button	8XØ16	4XØ14+2X14	12.5

RE542系列钻头/RE542 Drill Bit

头部规格 Specification / 钻头规格 Specifications	头部形状 Head Shape	钻头头部直径 Head Diameter (mm)	尾柄长度 Shank Length	花键数 Spline	排气孔数量 Port holes	合金数量X直径 Button qty.pcs X dia.mm			重量 Weight (Kg)
						齿型 Button Type (选购件 Optional)	边齿 Gauge Buttons	芯齿 Front buttons	
RE542									
中心下陷 Drop-Center Face		121	225	8	2	球齿 Domed Button	8XØ14	4XØ14+4XØ13	10.7
中心下陷 Drop-Center Face		124	225	8	2	球齿 Domed Button	8XØ14	4XØ14+4XØ13	11
中心下陷 Drop-Center Face		127	225	8	2	球齿 Domed Button	8XØ16	4XØ14+2X14	11.2
中心下陷 Drop-Center Face		133	225	8	2	球齿 Domed Button	8XØ16	4XØ14+2X14	11.4

PR52系列钻头/PR52 Drill Bit

头部规格 Specification / 钻头规格 Specifications	头部形状 Head Shape	钻头头部直径 Head Diameter (mm)	尾柄长度 Shank Length	花键数 Spline	排气孔数量 Port holes	合金数量X直径 Button qty.pcs X dia.mm			重量 Weight (Kg)
						齿型 Button Type (选购件 Optional)	边齿 Gauge Buttons	芯齿 Front buttons	
PR52									
中心下陷 Drop-Center Face		133	282	8	2	球齿 Domed Button	8XØ16	6XØ16+2XØ14	16.5
中心下陷 Drop-Center Face		136	282	8	2	球齿 Domed Button	8XØ16	6XØ16+2XØ14	16.7
中心下陷 Drop-Center Face		140	282	8	2	球齿 Domed Button	8XØ16	6XØ16+3XØ14	16.9
中心下陷 Drop-Center Face		143	282	8	2	球齿 Domed Button	8XØ16	6XØ16+3XØ14	17.1

PR54R系列钻头/PR54R Drill Bit

头部规格 Specification / 钻头规格 Specifications	头部形状 Head Shape	钻头头部直径 Head Diameter (mm)	尾柄长度 Shank Length	花键数 Spline	排气孔数量 Port holes	合金数量X直径 Button qty.pcs X dia.mm			重量 Weight (Kg)
						齿型 Button Type (选购件 Optional)	边齿 Gauge Buttons	芯齿 Front buttons	
PR54R									
中心下陷 Drop-Center Face		136	261	8	2	球齿 Domed Button	8XØ16	6XØ16+2XØ14	18.3
中心下陷 Drop-Center Face		140	261	8	2	球齿 Domed Button	8XØ16	6XØ16+3XØ14	18.5
中心下陷 Drop-Center Face		143	261	8	2	球齿 Domed Button	8XØ16	6XØ16+3XØ14	18.7
中心下陷 Drop-Center Face		146	261	8	2	球齿 Domed Button	8XØ16	6XØ16+3XØ14	18.9
中心下陷 Drop-Center Face		165	261	8	2	球齿 Domed Button	8XØ18	6XØ16+4XØ16	21
中心下陷 Drop-Center Face		178	261	8	2	球齿 Domed Button	8XØ18	6XØ16+4XØ16	22.5

INDUSTRIAL AND
ENGINEERING TECHNOLOGY Co., Limited
HONG KONG

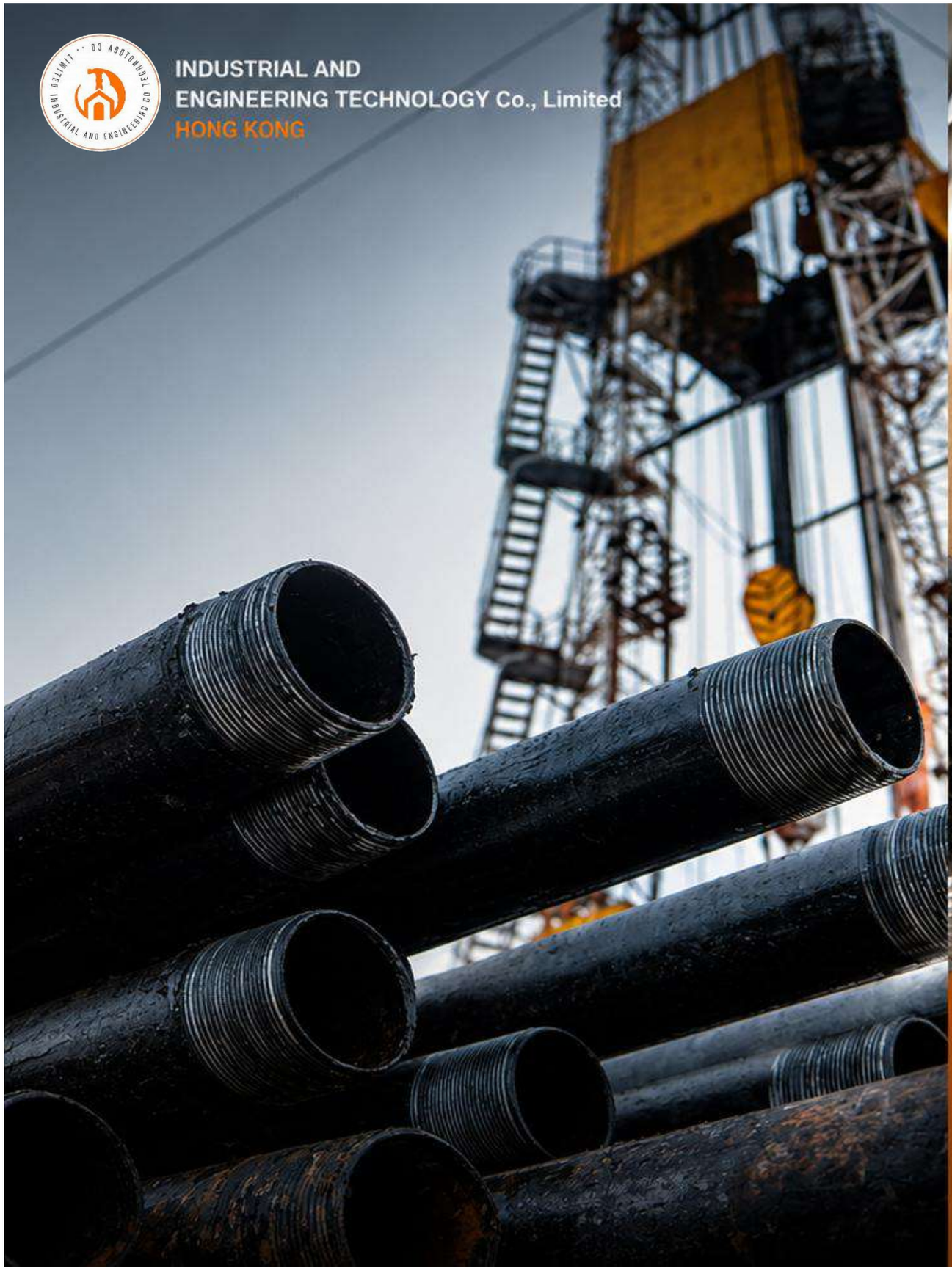

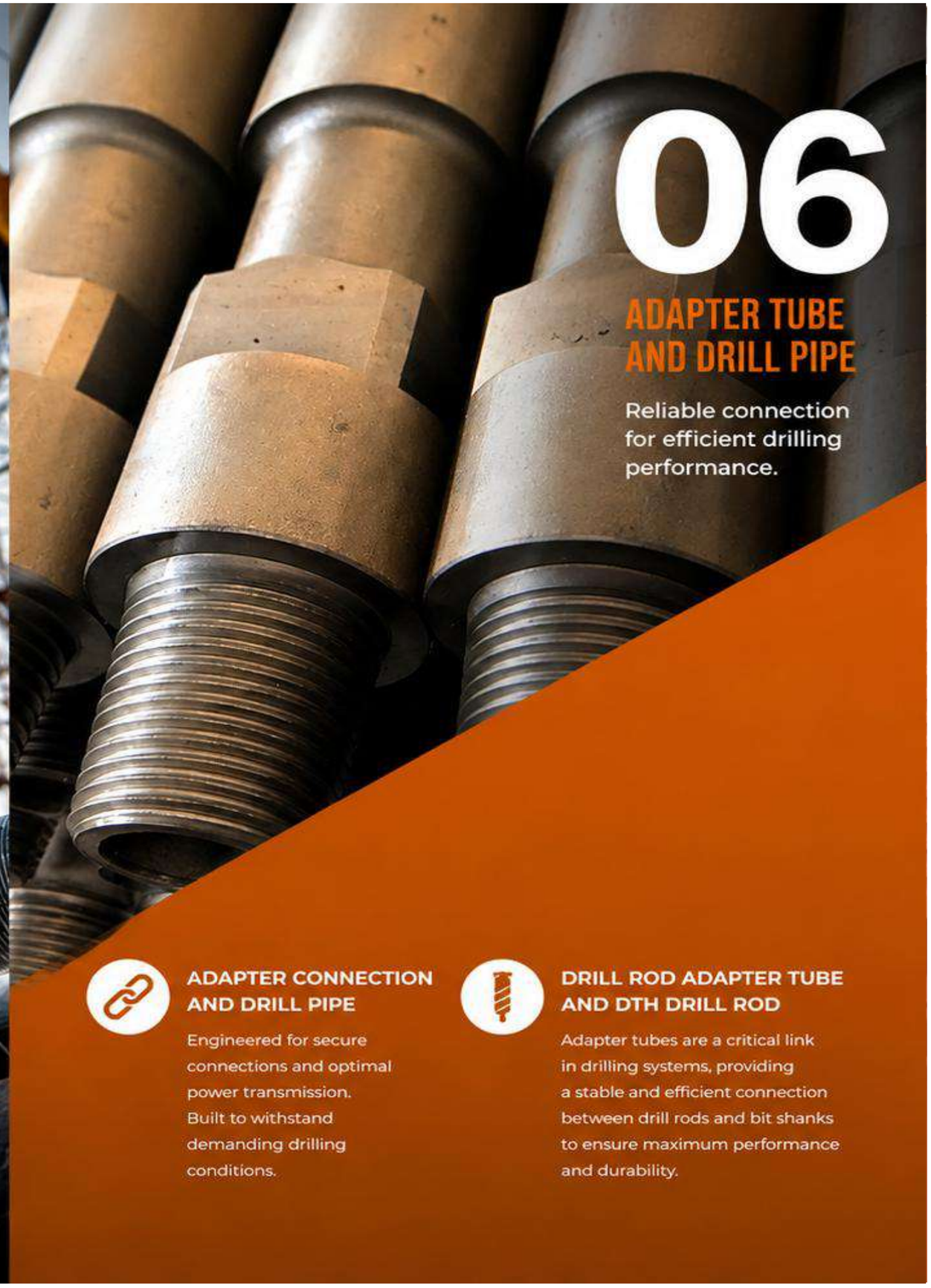

06

ADAPTER TUBE AND DRILL PIPE

Reliable connection for efficient drilling performance.

ADAPTER CONNECTION AND DRILL PIPE

Engineered for secure connections and optimal power transmission. Built to withstand demanding drilling conditions.

DRILL ROD ADAPTER TUBE AND DTH DRILL ROD

Adapter tubes are a critical link in drilling systems, providing a stable and efficient connection between drill rods and bit shanks to ensure maximum performance and durability.

Drill Rod Adapter Tube

过渡接头

过渡接头可以根据客户要求定制

adapter sub can be manufactured by customer specifications

Pin-Box Adapter Tube
公母接头

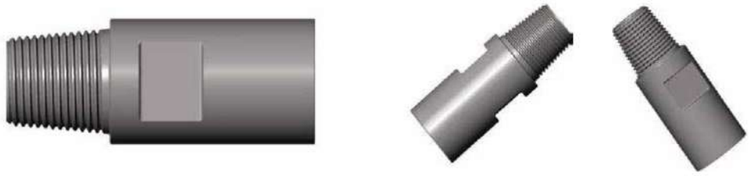

Pin-Pin Adapter Tube
公公接头

Box-Box Adapter Tube
母母接头

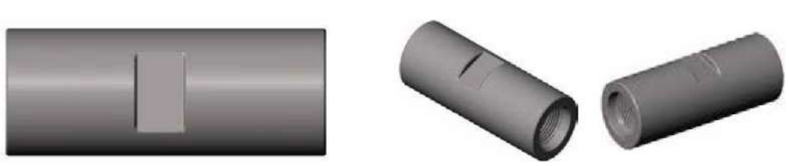

公母接头规格/Pin-Box Adapter Tubes

编号 number	接头型号	尺寸A (mm) Size A	尺寸B (mm) Size A	尺寸C (mm) Size A	铣方尺寸D (mm) Wrench Flat
1	2-3/8公-2-3/8母过渡接头	25	45	ø78	57
2	2-3/8IF公-2-3/8母过渡接头	25	45	ø89	70
3	2-3/8IF公-2-3/8IF母过渡接头	25	45	ø89	70
4	2-3/8公-2-7/8母过渡接头	25	45	ø102	70
5	2-7/8IF公-2-7/8IF母过渡接头	25	45	ø108	85
6	3-1/2公-3-1/2母过渡接头	25	50	ø114	95

公公接头规格/Pin-Pin Adapter Tubes

编号 number	接头型号	尺寸A (mm) Size A	尺寸B (mm) Size A	尺寸C (mm) Size A	铣方尺寸D (mm) Wrench Flat
1	2-3/8公-2-3/8公过渡接头	21	45	ø89	70
2	3-1/2公-3-1/2公过渡接头	23	50	ø114	95
3	3-1/2公-4-1/2公过渡接头	30	50	ø140	102
4	4-1/2公-4-1/2公过渡接头	30	50	ø140	102

母母接头规格/Box-Box Adapter Tubes

编号 number	接头型号	尺寸A (mm) Size A	尺寸B (mm) Size A	尺寸C (mm) Size A	铣方尺寸D (mm) Wrench Flat
1	2-3/8母-2-3/8母过渡接头	97	45	ø89	70
2	2-3/8母-2-7/8母过渡接头	115	50	ø102	85
3	2-3/8IF母-3-1/2母过渡接头	102	50	ø114	95
4	2-7/8母-3-1/2母过渡接头	122	50	ø114	95

Drill Rod Adapter

钻杆

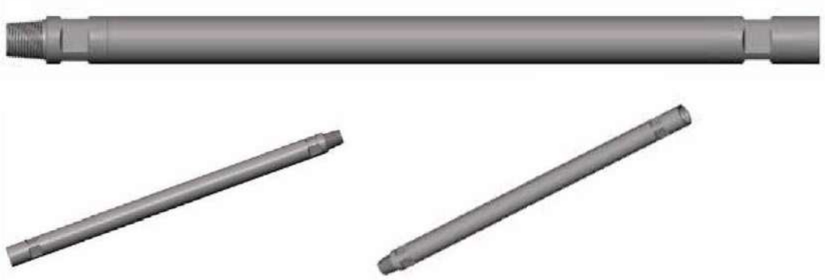

钻杆规格/

编号 Number	接头型号 Adapter	尺寸A Size A (mm)	尺寸B Size B (mm)	尺寸C Size C (mm)	尺寸D Size D (mm)	尺寸E Size E (mm)	尺寸F Size F (mm)	铣方尺寸G Wrench Flat (mm)
1	ø64钻杆（6度螺纹）	20	50	85	50	ø64	1500	55
2	ø76钻杆（2-3/8REG）	25	50	100	50	ø76	3000	57
3	ø76钻杆（2-3/8REG）	25	50	100	50	ø76	3000	64
4	ø89钻杆（2-3/8IF）	30	50	125	50	ø89	3000	65
5	ø89钻杆（2-3/8IF）	30	50	125	50	ø89	3000	70
6	ø102钻杆（2-7/8IF）	35	55	110	55	ø102	3000	85
7	ø108钻杆（2-7/8IF）	35	55	110	55	ø108	3000	85

Stablizer

钻杆扶正器示意图

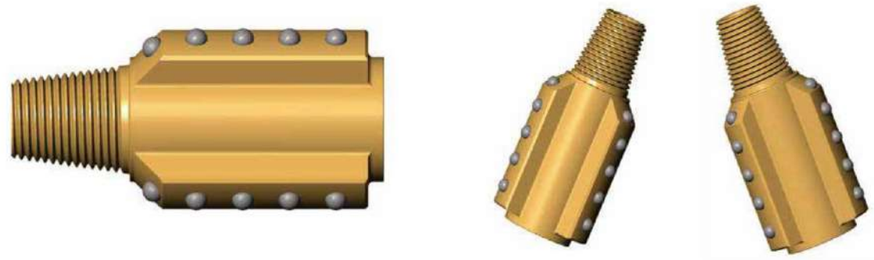

07

CONSTRUCTION & PILING – BIG HOLE DRILLING PRODUCT

High-performance drilling solutions for foundation engineering and water well applications.

FEATURES

- Optimized for large diameter drilling in various soil and rock conditions.
- High drilling efficiency with stable and precise operation.
- Built for demanding projects such as foundation piles and deep water wells.

ADVANTAGES

- Robust design ensures long service life and reliability.
- Capable of handling complex geological formations.
- Cost-effective solution with low maintenance and high productivity.

SP1880

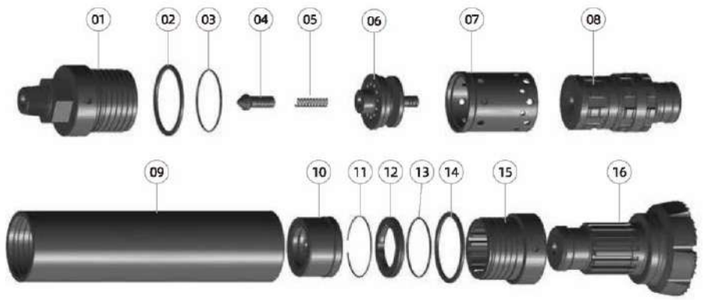

Ref.	部件 Parts	单重 Weight	件号 Part No	Ref.	部件 Parts	单重 Weight	件号 Part No
01	接头 Top Sub	361.5Kg	01-SP1880-01	09	外缸 Piston Case	493 Kg	01-SP1880-09
02	垫片 Adjuster Shim	4 Kg	01-SP1880-02	10	衬套 Guided Sleeve	69 Kg	01-SP1880-10
03	O形圈 "O"Ring	0.1 Kg	01-SP1880-03	11	挡圈 Check Ring	1 Kg	01-SP1880-11
04	逆止阀 Check Valve	3.4 Kg	01-SP1880-04	12	卡环 Retainer Ring	14.8 Kg	01-SP1880-12
05	弹簧 Spring	0.4 Kg	01-SP1880-05	13	O形圈 "O"Ring	0.08 Kg	01-SP1880-13
06	配气座 Valve Seat	76 Kg	01-SP1880-06	14	垫片 Adjuster Shim	4 Kg	01-SP1880-14
07	内缸 Inner Cylinder	54.5 Kg	01-SP1880-07	15	卡钎套 Drive Chuck	134 Kg	01-SP1880-15
08	活塞 Piston	366 Kg	01-SP1880-08	16	钻头 Drill Bit		01-SP1880-16

技术参数 / Technical Parameters

总长（不含钻头）Length(Less bit)	总重 Weight	冲击器外径 Outer Diameter	接头螺纹 Connection Thread	钻头钎柄 Bit Shank	钻孔范围 Hole Range
1957mm	1582Kg	¢445mm	API8 5/8"REG	SP1880	¢500-¢680mm

适用气压 Work Pressure	推荐转速 Recommended rotation speed	耗风量/Air Consumption	
		1.8Mpa	2.4Mpa
1.5-3.3 Mpa	20-40 r/min	73m³/min	97m³/min

ND180

Ref.	部件 Parts	单重 Weight	件号 Part No	Ref.	部件 Parts	单重 Weight	件号 Part No
01	接头 Top Sub	274 Kg	01-YC410-01	11	配气杆 Rigid Valve	22.3 Kg	01-YC410-11
02	垫片 Adjuster Shim	2.9 Kg	01-YC410-02	12	O形圈 "O"Ring	0.03 Kg	01-YC410-12
03	O形圈 "O"Ring	0.03 Kg	01-YC410-03	13	杆座 Valve Seat	50 Kg	01-YC410-13
04	逆止阀 Check Valve	3.4 Kg	01-YC410-04	14	O形圈 "O"Ring	0.03 Kg	01-YC410-14
05	弹簧 Spring	0.3 Kg	01-YC410-05	15	活塞 Piston	347 Kg	01-YC410-15
06	调整圈 Adjuster Ring	1.5 Kg	01-YC410-06	16	外缸 Piston Case	562 Kg	01-YC410-16
07	尼龙垫 Nylon washer	1.2 Kg	01-YC410-07	17	挡圈 Check Ring	0.3 Kg	01-YC410-17
08	配气座 Valve Seat	26.4 Kg	01-YC410-08	18	卡环 Retainer Ring	10 Kg	01-YC410-18
09	调整圈 Regulate ring	0.4 Kg	01-YC410-09	19	垫片 Adjuster Shim	2.9 Kg	01-YC410-19
10	橡胶垫 Rubber Buffer	0.3 Kg	01-YC410-10	20	卡钎套 Drive Chuck	155 Kg	01-YC410-20

技术参数 / Technical Parameters

总长（不含钻头）Length(Less bit)	总重 Weight	冲击器外径 Outer Diameter	接头螺纹 Connection Thread	钻头钎柄 Bit Shank	钻孔范围 Hole Range
2162mm	1460Kg	¢410mm	API8 5/8"REG	ND180	¢295-¢400mm

适用气压 Work Pressure	推荐转速 Recommended rotation speed	耗风量/Air Consumption	
		1.8Mpa	2.4Mpa
1.5-3.5 Mpa	25~40 r/min	63m³/min	85m³/min

SW530

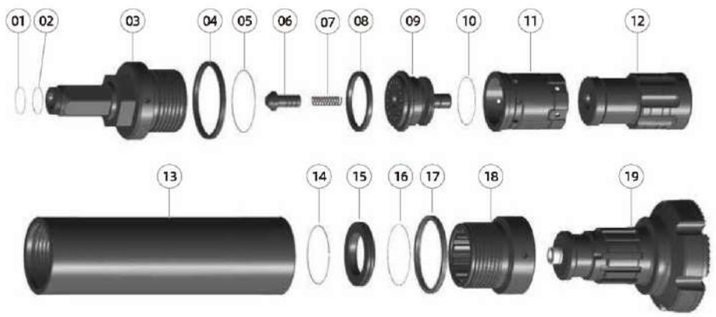

Ref.	部件 Parts	单重 Weight	件号 Part No	Ref.	部件 Parts	单重 Weight	件号 Part No
01	O形圈 "O"Ring	0.05 Kg	01-SW530-01	11	内缸 Inner Cylinder	93 Kg	01-SW530-11
02	O形圈 "O"Ring	0.05 Kg	01-SW530-02	12	活塞 Piston	454.5 Kg	01-SW530-12
03	接头 Top Sub	534 Kg	01-SW530-03	13	外缸 Piston Case	1139.5Kg	01-SW530-13
04	垫片 Adjuster Shim	8 Kg	01-SW530-04	14	挡圈 Piston Retaining Ring	0.3 Kg	01-SW530-14
05	O形圈 "O"Ring	0.1 Kg	01-SW530-05	15	卡环 Retainer Ring	33 Kg	01-SW530-15
06	逆止阀 Check Valve	7.5 Kg	01-SW530-06	16	O形圈 "O"Ring	0.1 Kg	01-SW530-16
07	弹簧 Spring	0.4 Kg	01-SW530-07	17	垫片 Adjuster Shim	8 Kg	01-SW530-17
08	橡胶垫 Rubber Buffer	1.5 Kg	01-SW530-08	18	卡钎套 Driver Chuck	246.8Kg	01-SW530-18
09	配气座 Valve Seat	134 Kg	01-SW530-09	19	钻头 Drill Bit		01-SW530-19
10	O形圈 "O"Ring	0.1 Kg	01-SW530-10				

技术参数 / Technical Parameters

总长（不含钻头）Length(Less bit)	总重 Weight	冲击器外径 Outer Diameter	接头螺纹 Connection Thread	钻头钎柄 Bit Shank	钻孔范围 Hole Range
2438mm	2660.5Kg	¢530mm	320 六方	SW530	¢600-¢800mm

适用气压 Work Pressure	推荐转速 Recommended rotation speed	耗风量/Air Consumption	
		1.8Mpa	2.4Mpa
1.5-3.5 Mpa	15～30 r/min	85m³/min	110m³/min

SW640

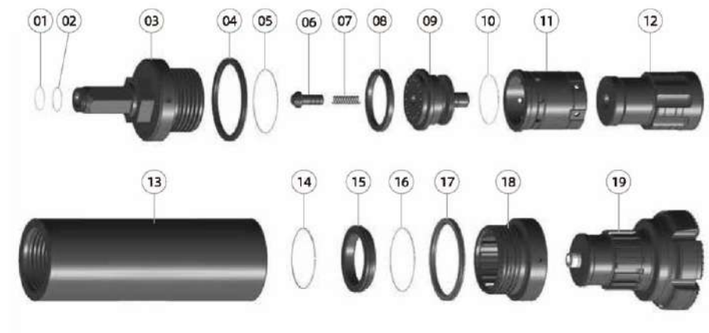

Ref.	部件 Parts	单重 Weight	件号 Part No	Ref.	部件 Parts	单重 Weight	件号 Part No
01	O形圈 "O"Ring	0.05 Kg	01-SW640-01	11	内缸 Innre Cylinder	137.6Kg	01-SW640-11
02	O形圈 "O"Ring	0.05 Kg	01-SW640-02	12	活塞 Piston	626.3Kg	01-SW640-12
03	接头 Top Sub	705.5Kg	01-SW640-03	13	外缸 Piston Case	1797 Kg	01-SW640-13
04	垫片 Adjuster Shim	15.4 Kg	01-SW640-04	14	档圈 Piston Retaining Ring	0.4 Kg	01-SW640-14
05	O形圈 "O"Ring	0.2 Kg	01-SW640-05	15	卡环 Retainer Ring	42.3 Kg	01-SW640-15
06	逆止阀 Check Valve	7.5 Kg	01-SW640-06	16	O形圈 "O"Ring	0.2 Kg	01-SW640-16
07	弹簧 Spring	0.4 Kg	01-SW640-07	17	垫片 Adjuster Shim	15.4 Kg	01-SW640-17
08	橡胶垫 Rubber Buffer	3 Kg	01-SW640-08	18	卡钎套 Drive Chuck	240.4 Kg	01-SW640-18
09	配气座 Valve Seat	203.6Kg	01-SW640-09	19	钻头 Drill Bit		01-SW640-19
10	O形圈 "O"Ring	0.2 Kg	01-SW640-10				

技术参数 / Technical Parameters

总长（不含钻头）Length(Less bit)	总重 Weight	冲击器外径 Outer Diameter	接头螺纹 Connection Thread	钻头钎柄 Bit Shank	钻孔范围 Hole Range
2390mm	3795.5Kg	¢640mm	320 六方	SW640	¢720-¢1000mm

适用气压 Work Pressure	推荐转速 Recommended rotation speed	耗风量/Air Consumption	
		1.8Mpa	2.4Mpa
1.5-3.5 Mpa	15～30 r/min	92m³/min	122m³/min

Piling Bits

大孔径钻头

桩孔系列钻头/Piling Drill Bit

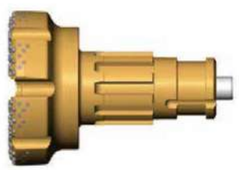
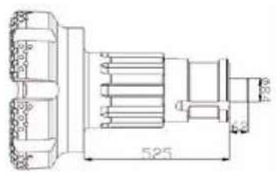

型号 Model	花键数 Spline	尾部长 Tail length
SW370	10	525
钻孔范围 Hole range		450-600mm

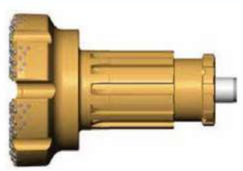
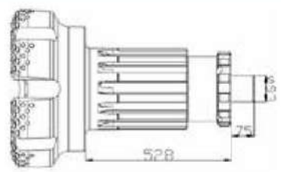

型号 Model	花键数 Spline	尾部长 Tail length
SW410	12	528
钻孔范围 Hole range		500-800mm

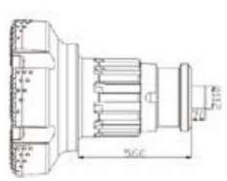

型号 Model	花键数 Spline	尾部长 Tail length
SW530	12	560
钻孔范围 Hole range		600-1000mm

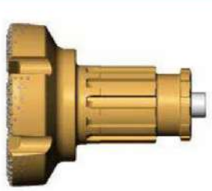
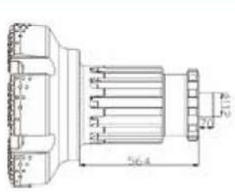

型号 Model	花键数 Spline	尾部长 Tail length
N240	12	564
钻孔范围 Hole range		600-1000mm

桩孔系列钻头/Piling Drill Bit

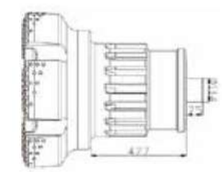

型号 Model	花键数 Spline	尾部长 Tail length
SW640	16	477
钻孔范围 Hole range		700-1200mm

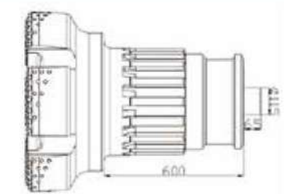

型号 Model	花键数 Spline	尾部长 Tail length
640SN	16	600
钻孔范围 Hole range		700-1200mm

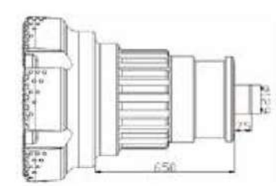

型号 Model	花键数 Spline	尾部长 Tail length
SW800S	18	650
钻孔范围 Hole range		900-1250mm

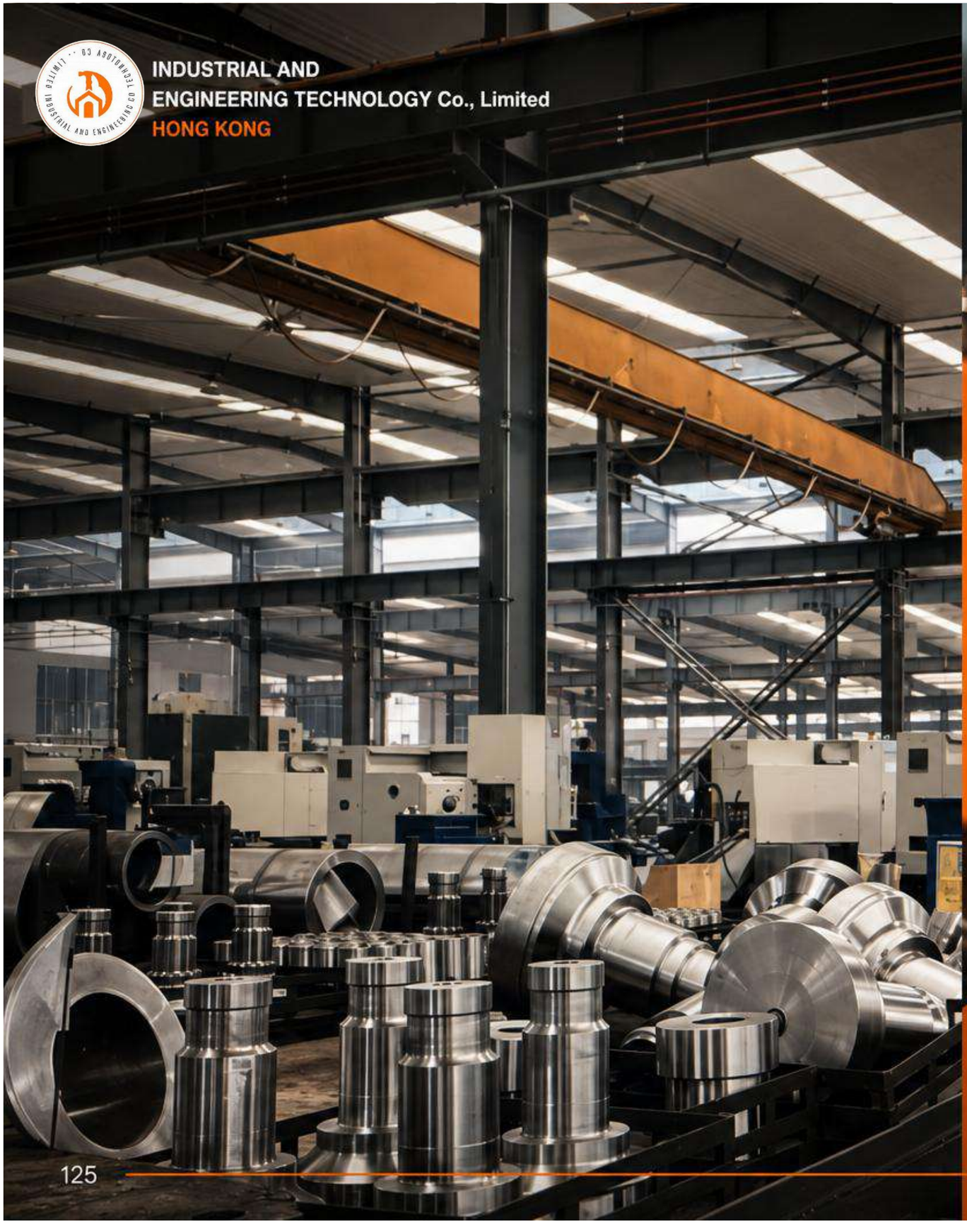

08

OTHER PARTS

Tools and Components

High-quality components and accessories to support reliable drilling operations.

PREMIUM QUALITY

Manufactured to strict standards for long service life and consistent performance.

WIDE COMPATIBILITY

Designed to fit a variety of drilling tools and equipment for maximum flexibility on the job.

BH140

BH140反打冲击器/Back Hammer	Ref.	部件 Parts	单重 Weight	件号 Part No.
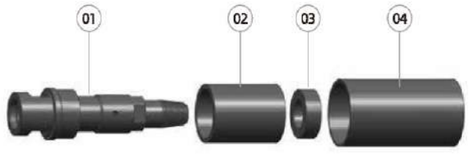	01	芯轴 Mandrel	16.5 Kg	20-BH140-01
	02	活塞 Piston	8.7 Kg	20-BH140-02
	03	撞块 Bumping Block	2 Kg	20-BH140-03
	04	外套管Outer Casing	6.7 Kg	20-BH140-04

技术参数 / Technical Parameters

总长（不含钻头）Length(Less bit)	总重 Weight	冲击器外径 Outer Diameter	接头螺纹 Connection Thread	接头螺纹 Connection Thread
420mm	34Kg	¢155mm	API2 3/8"REG	0.8-1.7 Mpa

BH190

BH190反打冲击器/Back Hammer	Ref.	部件 Parts	单重 Weight	件号 Part No.
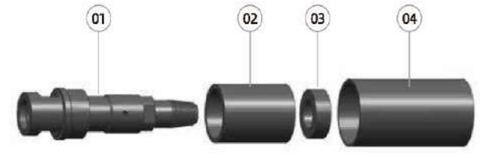	01	芯轴 Mandrel	42.5 Kg	20-BH190-01
	02	活塞 Piston	25.2 KG	20-BH190-02
	03	撞块 Bumping Block	3.4 Kg	20-BH190-03
	04	外套管Outer Casing	13.5 Kg	20-BH190-04

技术参数 / Technical Parameters

总长（不含钻头）Length(Less bit)	总重 Weight	冲击器外径 Outer Diameter	接头螺纹 Connection Thread	接头螺纹 Connection Thread
560 mm	84.5 Kg	¢220mm	API3 1/2"REG	0.8-3.0 Mpa

BH170

BH170反打冲击器/Back Hammer	Ref.	部件 Parts	单重 Weight	件号 Part No.
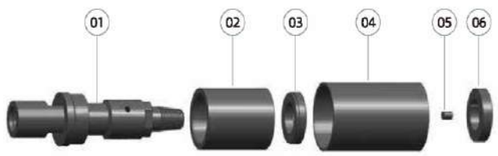	01	芯轴 Mandrel	32 Kg	20-BH170-01
	02	活塞 Piston	18 Kg	20-BH170-02
	03	撞块 Bumping Block	2.5 Kg	20-BH170-03
	04	外套管Outer Casing	9 Kg	20-BH170-04
	05	平键 Flat Key	0.1 Kg	20-BH170-05
	06	垫块 Cushion Block	2.7 Kg	20-BH170-06

技术参数 / Technical Parameters

总长（不含钻头）Length(Less bit)	总重 Weight	冲击器外径 Outer Diameter	接头螺纹 Connection Thread	接头螺纹 Connection Thread
606 mm	64.5 Kg	¢190mm	API3 1/2"REG	0.8-2.5 Mpa

BH240

BH240反打冲击器/Back Hammer	Ref.	部件 Parts	单重 Weight	件号 Part No.
	01	芯轴 Mandrel	71.5 Kg	20-BH240-01
	02	活塞 Piston	44.3 KG	20-BH240-02
	03	撞块 Bumping Block	7.8 Kg	20-BH240-03

技术参数 / Technical Parameters

总长（不含钻头）Length(Less bit)	总重 Weight	冲击器外径 Outer Diameter	接头螺纹 Connection Thread	接头螺纹 Connection Thread
600mm	123.5 Kg	¢240mm	API4 1/2"REG	0.8-3.0 Mpa

Breakout Bench

拆卸台

冲击器拆卸工作台使用方法:

01 把冲击器放进卸钎器里边。
02 调节冲击器和扳手的位置，使扳手卡住接头方口处，并与千斤顶处于同一平面内。
03 用螺丝固定好K形座。
04 用相应螺丝将扳手固定紧。
05 缓慢上下摇动千斤顶把手，将冲击器慢慢卸开。
06 接头拆卸完毕后，将千斤顶回油，回油完毕后，松开螺丝，放下扳手，卸下K形座，将冲击器调头。
07 调节冲击器和扳手的位置，使扳手卡住卡钳套并与千斤顶处于同一平面内。
08 调整冲击器。
09 放入K形座，并用螺丝将K形座及扳手固定好。
10 缓慢上下摇动千斤顶把手，将冲击器慢慢卸开。

Breakout Bench Operation Method:

01 Put hammer in the bench.
02 Adjust hammer and wrench to make wrench block at top sub; let wrench and jack be in the same plane.
03 Fix K-shaped base with nut.
04 Fix wrench with nuts.
05 Sway jack handle slowly to unlink hammer .
06 After top sub dismantled, grease jack, release nuts, discharge K-shaped base and turn around hammer.
07 Adjust hammer and wrench to make wrench block drive chuck; let wrench and jack be in the same plane.
08 Adjust hammer.
09 Fix K-shaped base and wrench with nuts.
10 Sway jack handle slowly to unlink hammer.

Shock Absorber

缓冲器

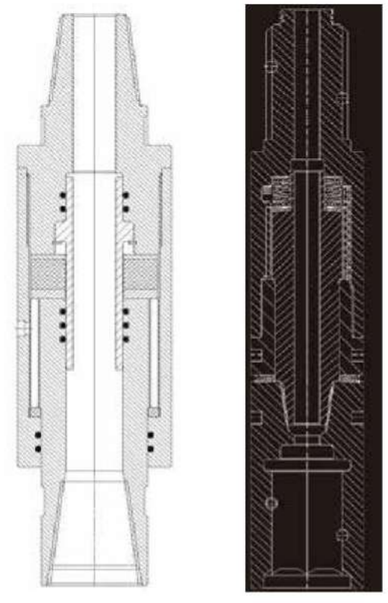

名称 Name	接头规格 Adapter	直径*长度(mm) Diameter*Length
12寸缓冲器	6-5/8REG	270*795
14寸缓冲器	273hexagonal	355*882
18寸缓冲器	273hexagonal	457*1110
24寸缓冲器	320hexagonal	600*1344
28寸缓冲器	320hexagonal	640*1540

Drilling Accessories

钻机配件

钻机孔套
Rig Deck Bush

钻杆拆卸扳手
Rod Spanner

INDUSTRIAL AND
ENGINEERING TECHNOLOGY
Co., Limited
HONG KONG

ABOUT US

Industrial and Engineering Technology Co., Limited is a professional supplier of high-quality drilling tools and related equipment for foundation engineering, mining, water well and construction projects worldwide.
We are committed to providing reliable products, competitive solutions and excellent service to help our customers achieve maximum productivity.

CONTACT US

8 Floor, China Hong Kong Tower,
8-12 Hennessy Road,
Wan Chai, Hong Kong

+852 5473 6914

business@iet-hongkong.com

www.iet-hongkong.com

Reliable Tools.
Superior Performance.
Built for Demanding Conditions.

DRILLING TOOLS PRODUCT CATALOG

Industrial and Engineering Technology Co., Limited

INDUSTRIAL AND
ENGINEERING TECHNOLOGY
Co., Limited
HONG KONG

DRILLING TOOLS PRODUCT CATALOG
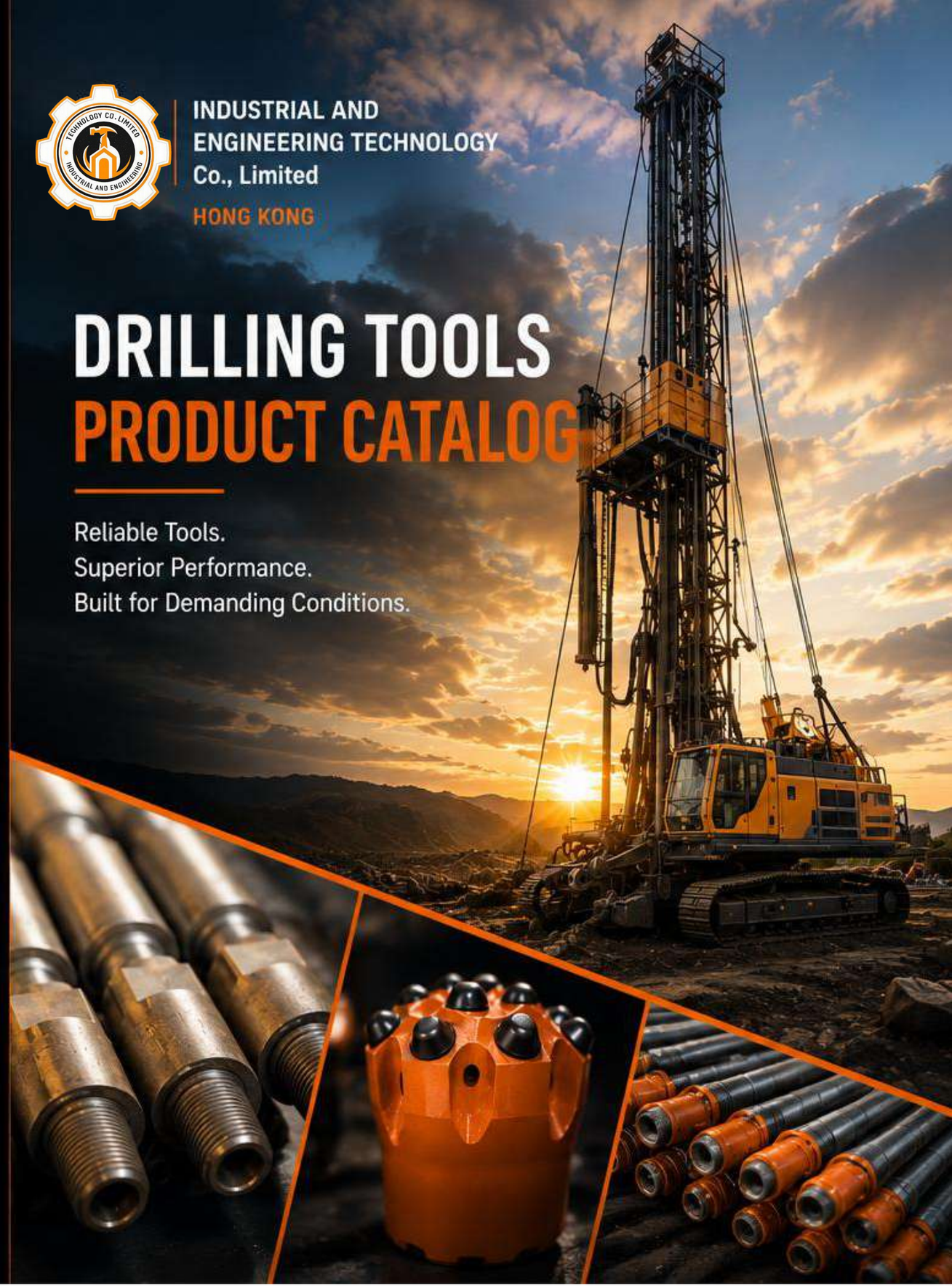
Reliable Tools.
Superior Performance.
Built for Demanding Conditions.